Rear Flashers, Markers, Tail and Stop Lights

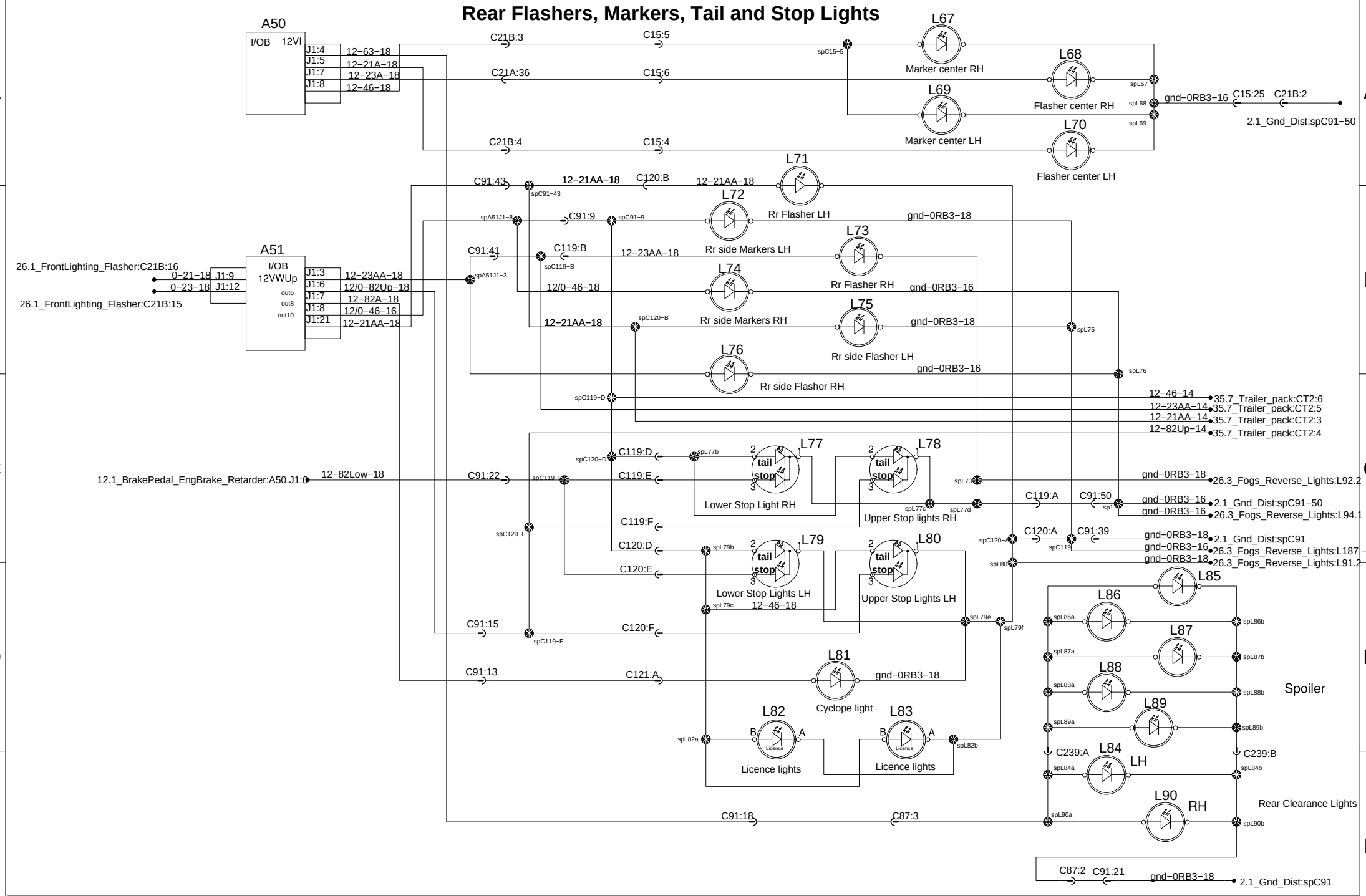

PREVOST®	WIRING DIAGRAM	No:D061040	Page:26.2	Rev:0