Wiper and washer

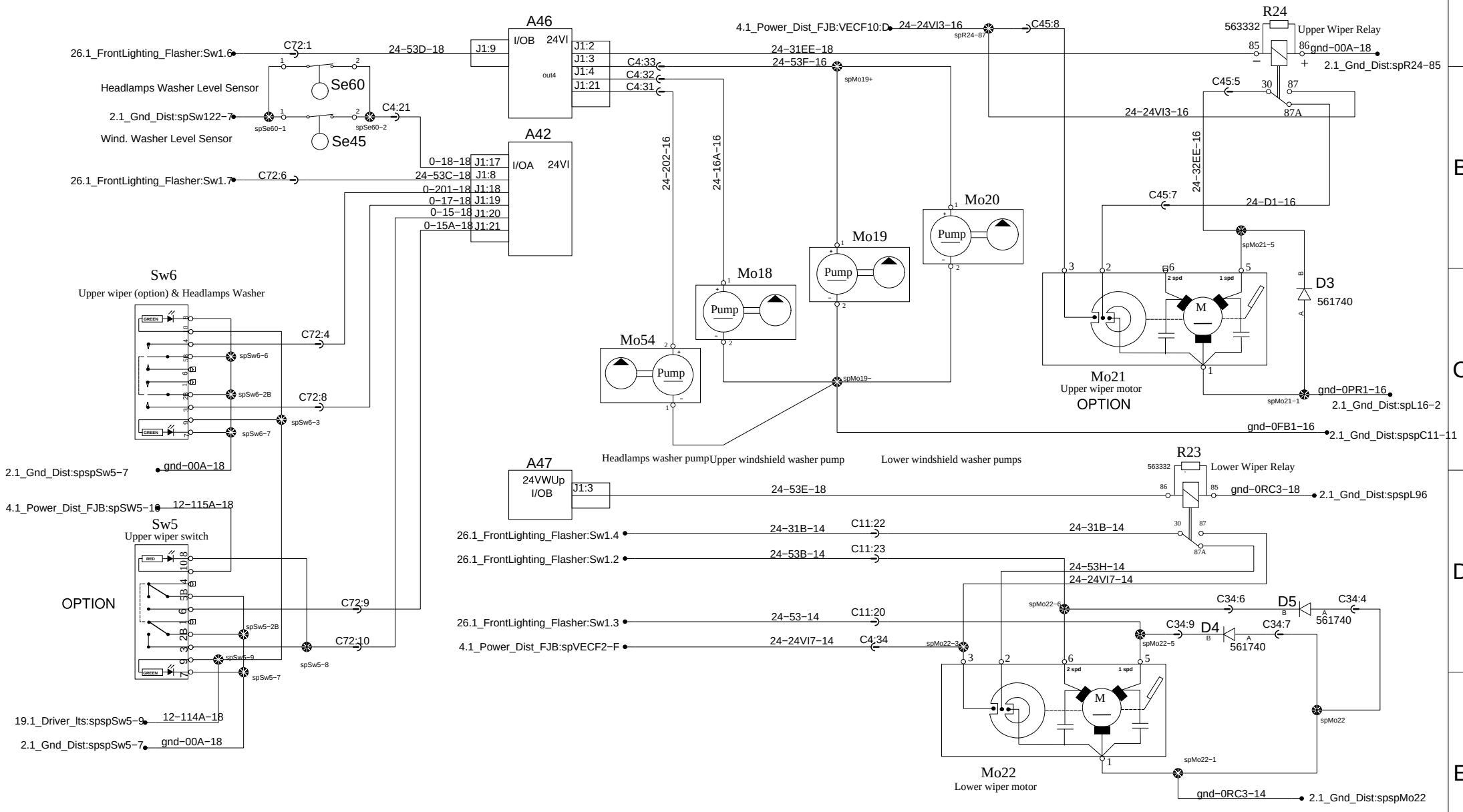

PREVOST®

WIRING DIAGRAM

No:D061040

Page:34.1

Rev:4