Multiplex Can, J1587 Network and Addressing

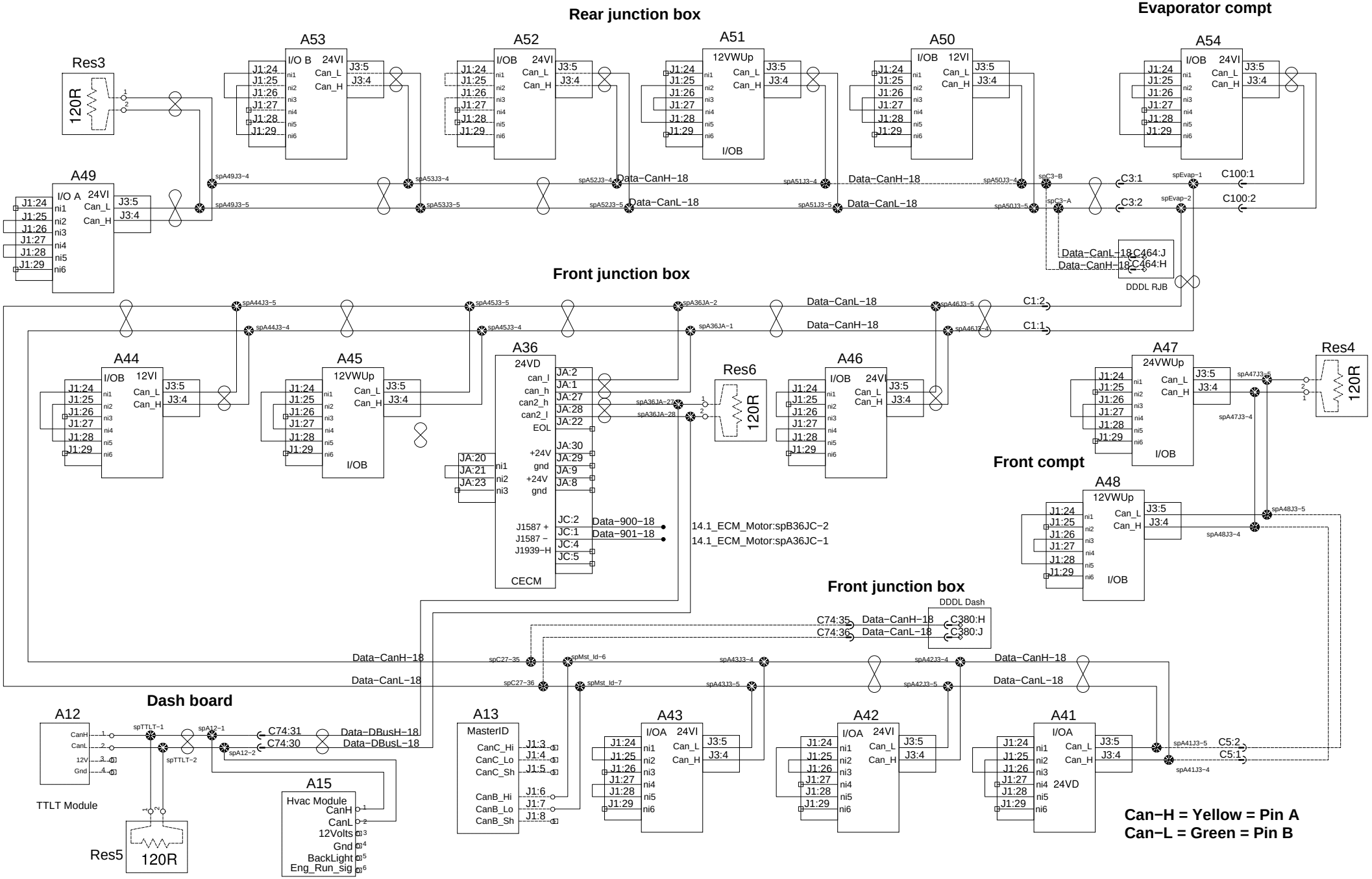

PREVOST®	WIRING DIAGRAM	No:D061040	Page:6.1	Rev:0