# Brake, Engine Brake and Retarder

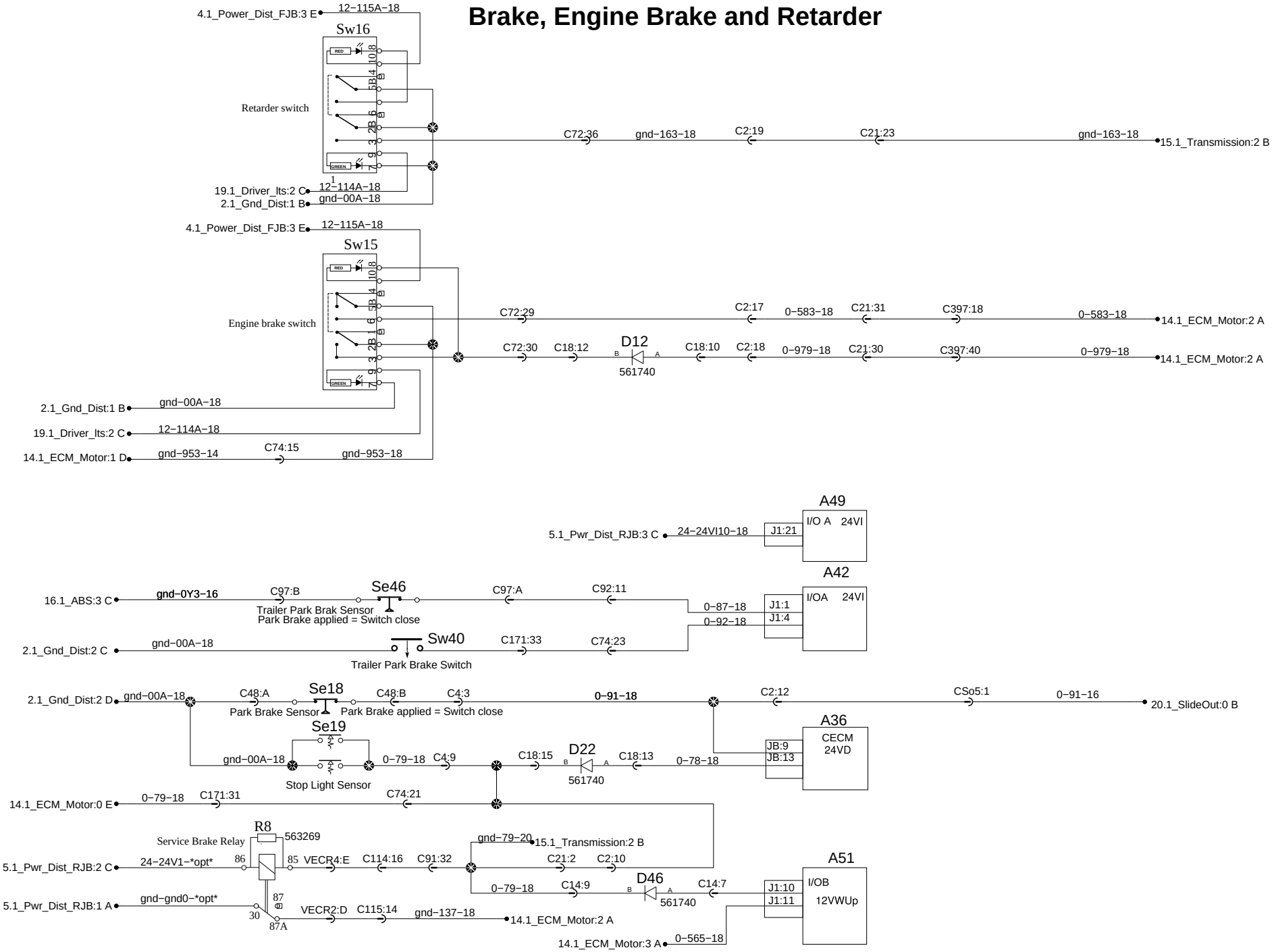


| PREVOST® | WIRING DIAGRAM | No:D061080 | Page:12.1 | Rev:01 |
|---|---|---|---|---|