Hvac_Defroster

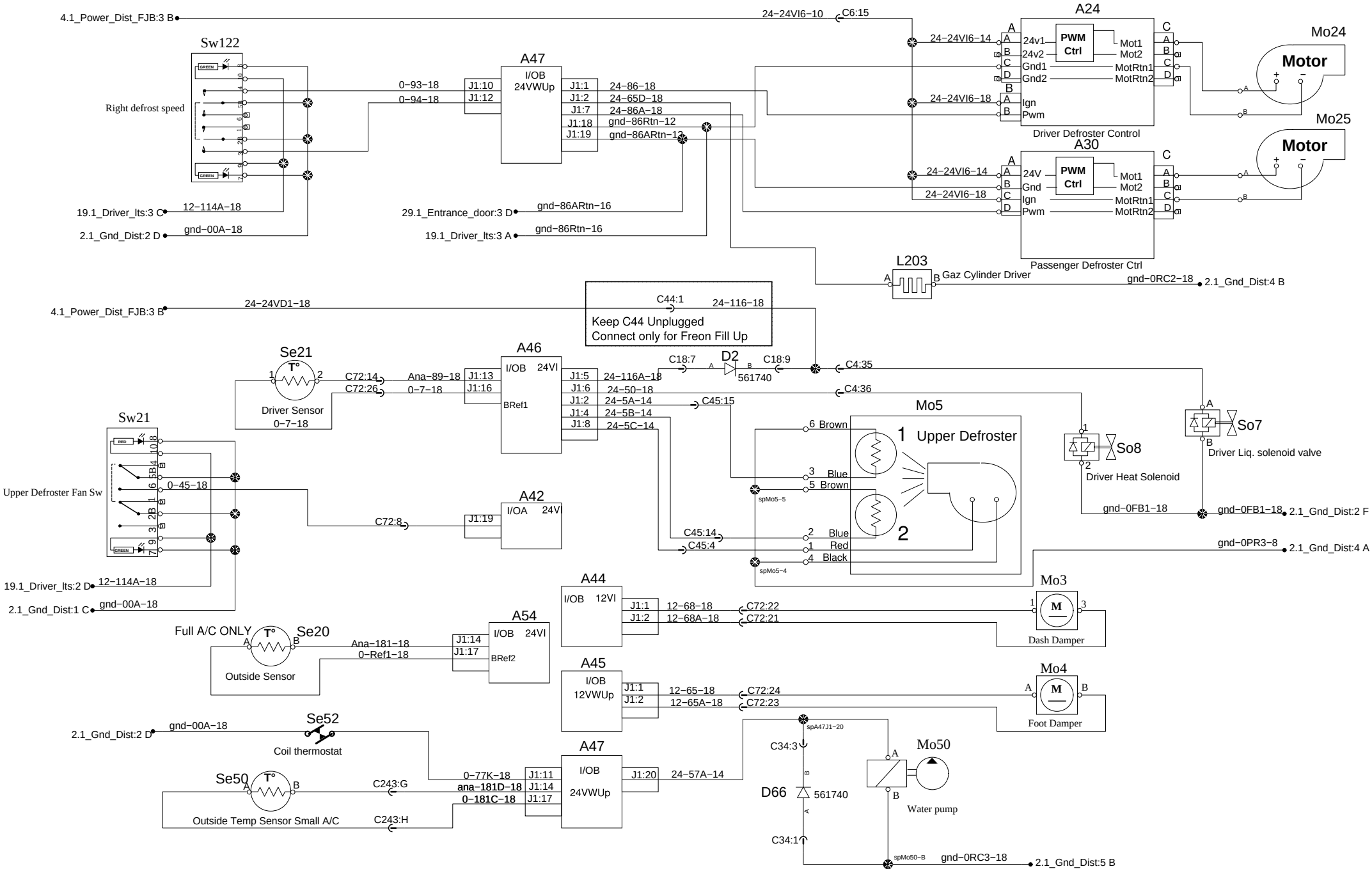

PREVOST®	WIRING DIAGRAM	No:D061080	Page:18.1	Rev:03