Hvac

Wiring identifiers — **Full A/C**
- - - - - Full A/C and Small A/C

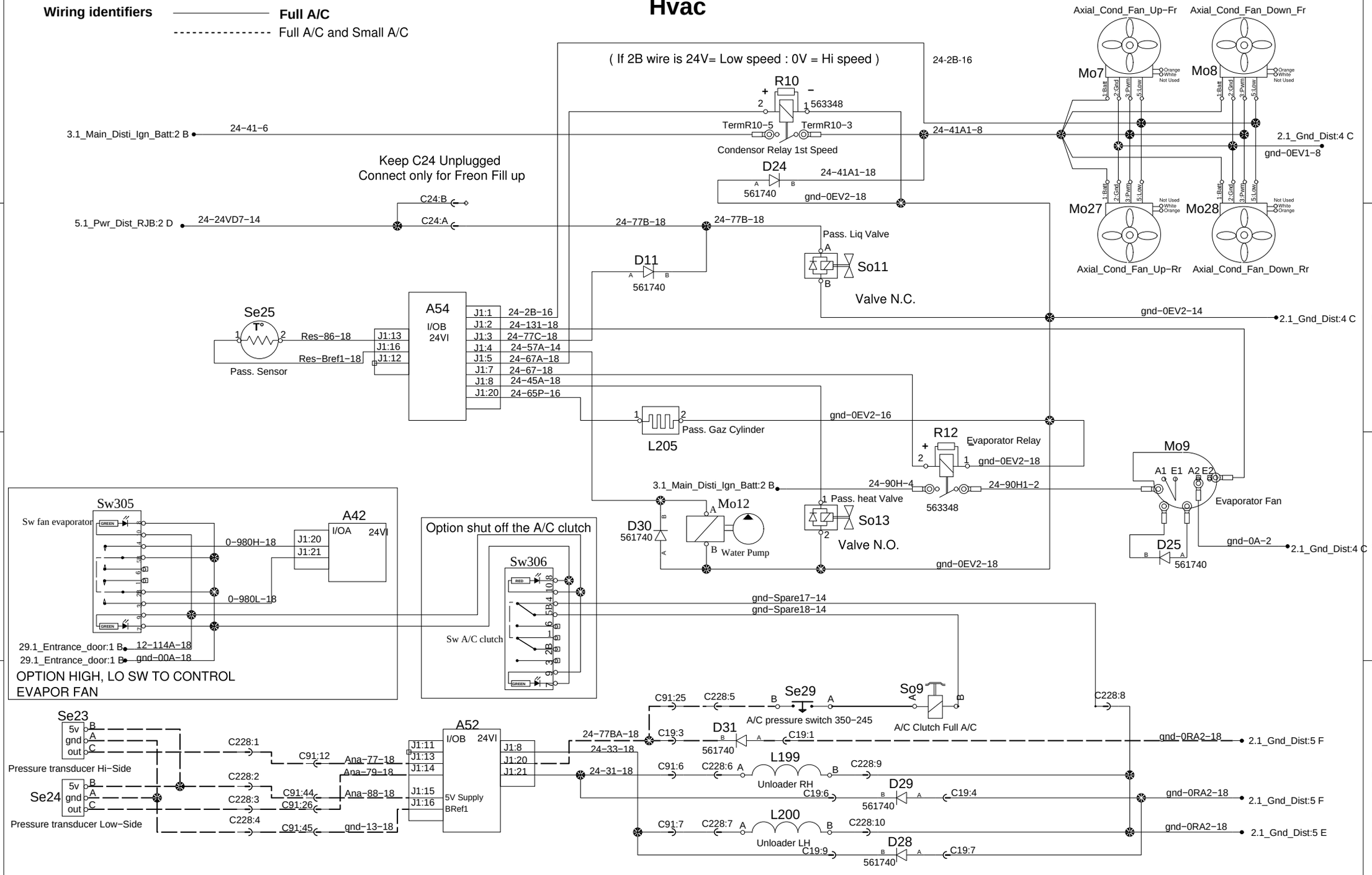

PREVOST®	WIRING DIAGRAM	No:D061080	Page:18.2 sp2	Rev:00