MAIN DISTRIBUTION Equalizer, Batteries & Ignition

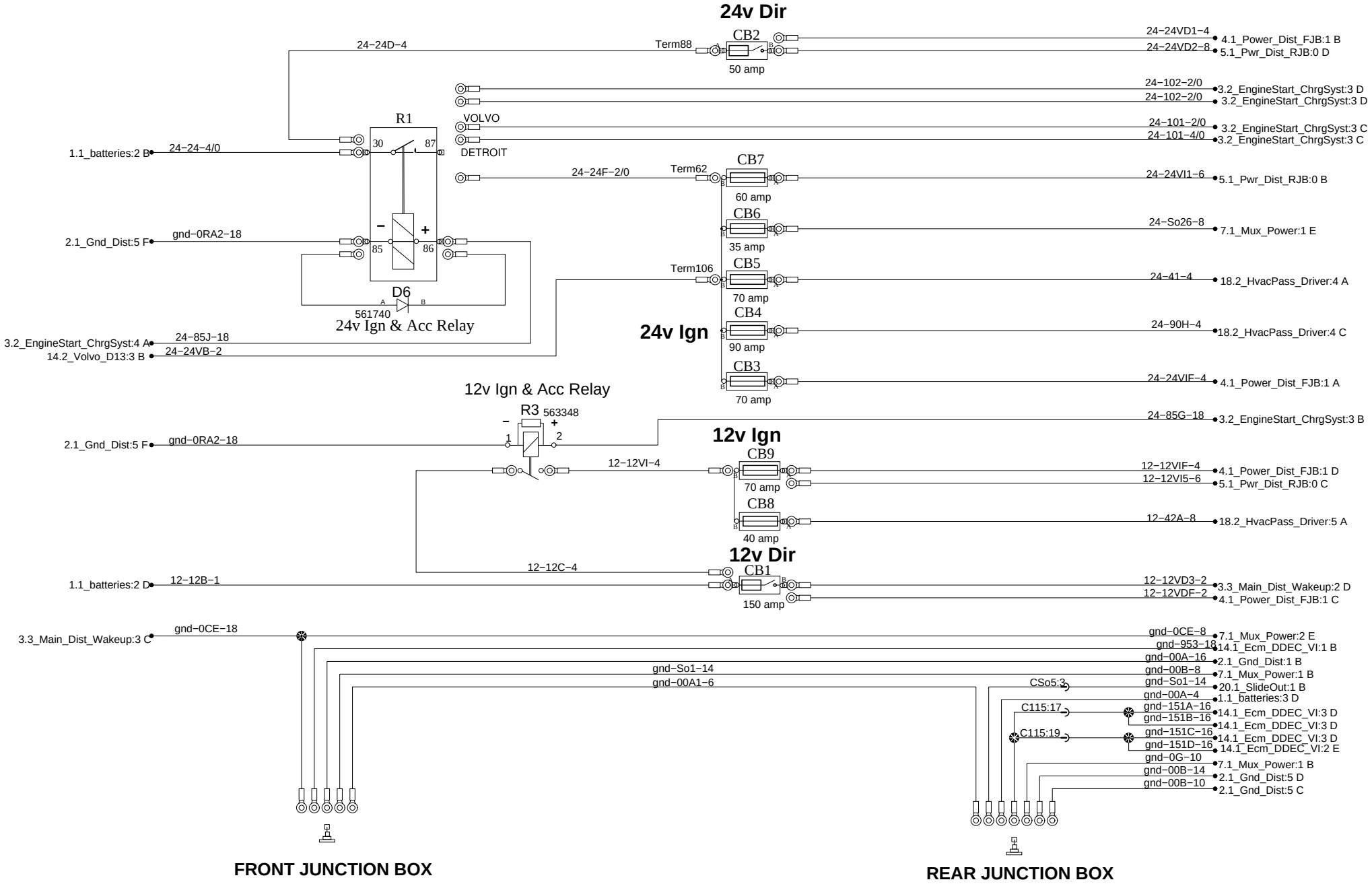

PREVOST®	WIRING DIAGRAM	No:D061080	Page:3.1	Rev:08