MAIN DISTRIBUTION Wake−Up

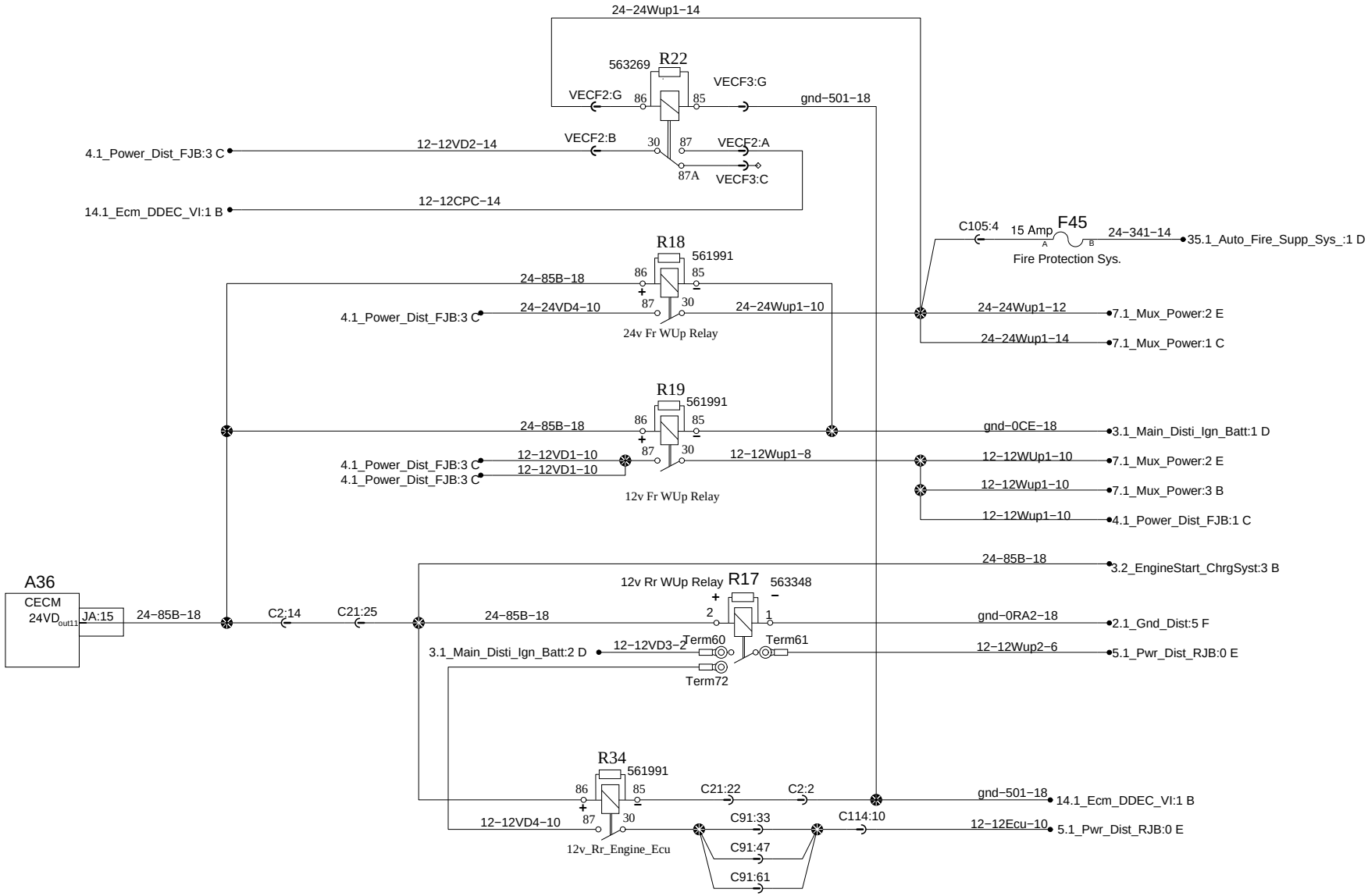

PREVOST®	WIRING DIAGRAM	No:D061080	Page:3.3	Rev:09