Multiplex Power Supply Distribution

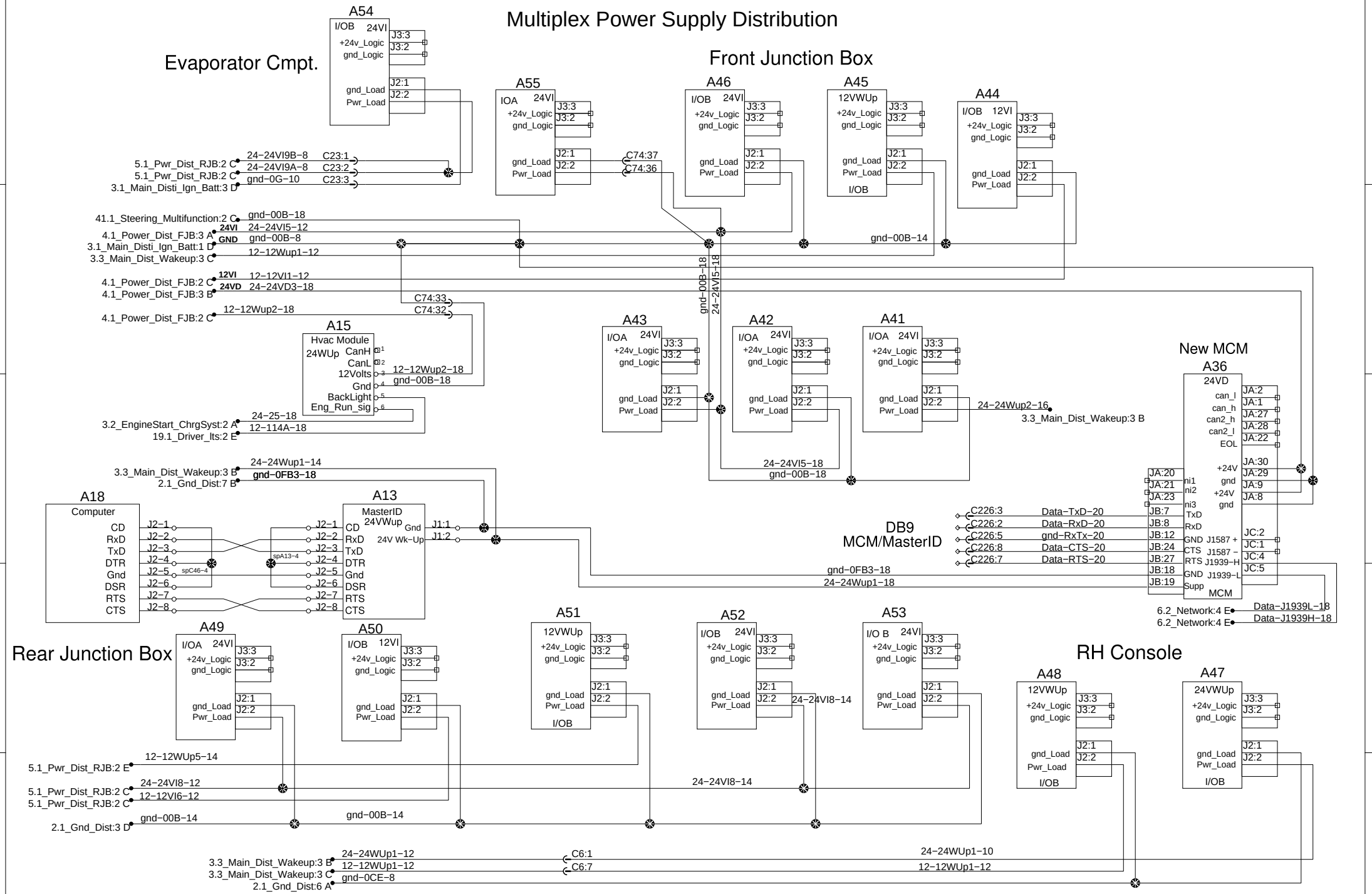

PREVOST®

WIRING DIAGRAM

No:D061140

Page:7.1

Rev:05