BATTERIES

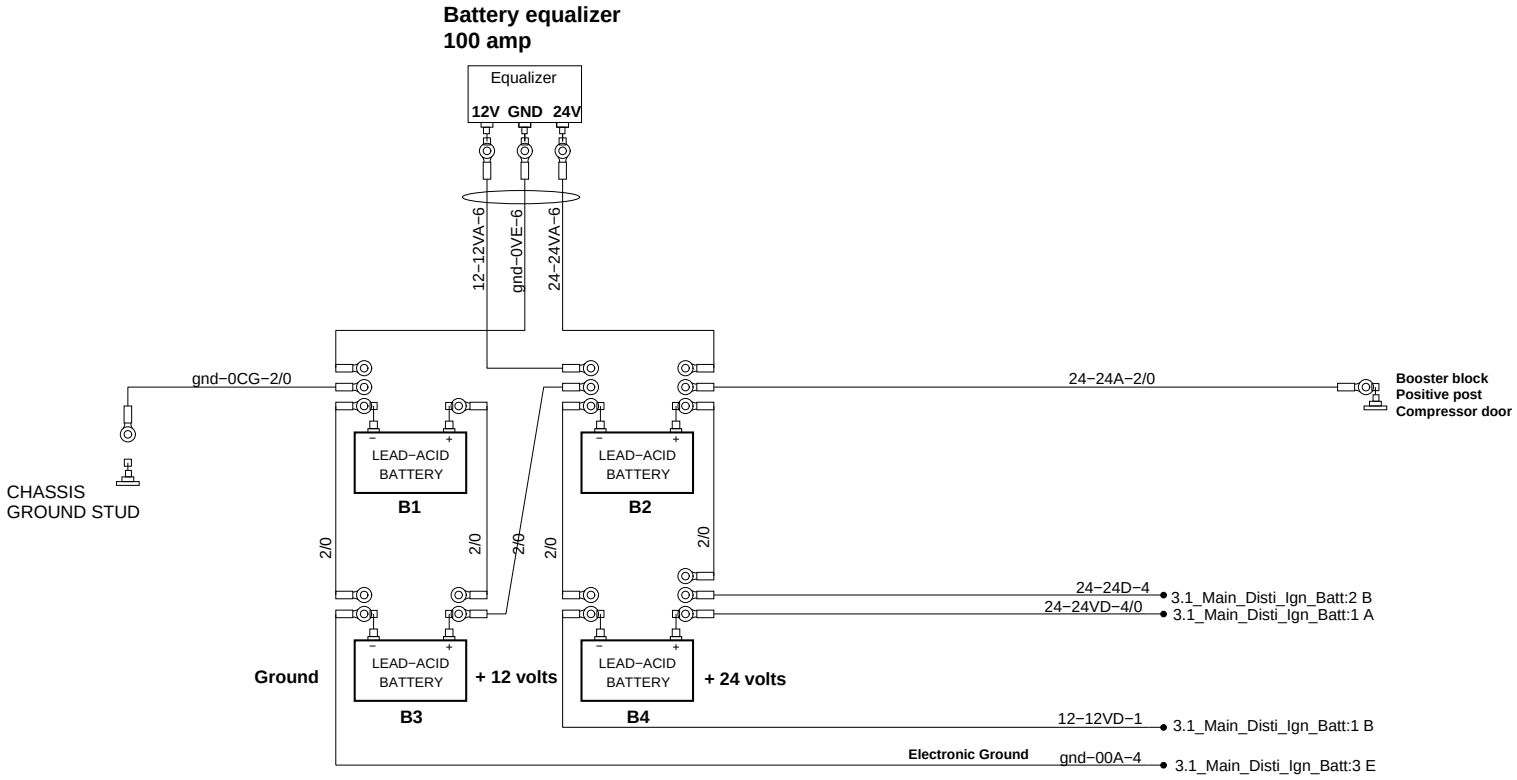
Battery equalizer
100 amp
Equalizer
12V GND 24V
12−12VA−6
gnd−0VE−6
24−24VA−6
gnd−0CG−2/0
CHASSIS
GROUND STUD
LEAD−ACID
BATTERY
B1
B2
B3
B4
2/0
Ground
+ 12 volts
+ 24 volts
24−24A−2/0
Booster block
Positive post
Compressor door
24−24D−4
3.1_Main_Disti_Ign_Batt:2 B
24−24VD−4/0
3.1_Main_Disti_Ign_Batt:1 A
12−12VD−1
3.1_Main_Disti_Ign_Batt:1 B
Electronic Ground
gnd−00A−4
3.1_Main_Disti_Ign_Batt:3 E