Cluster

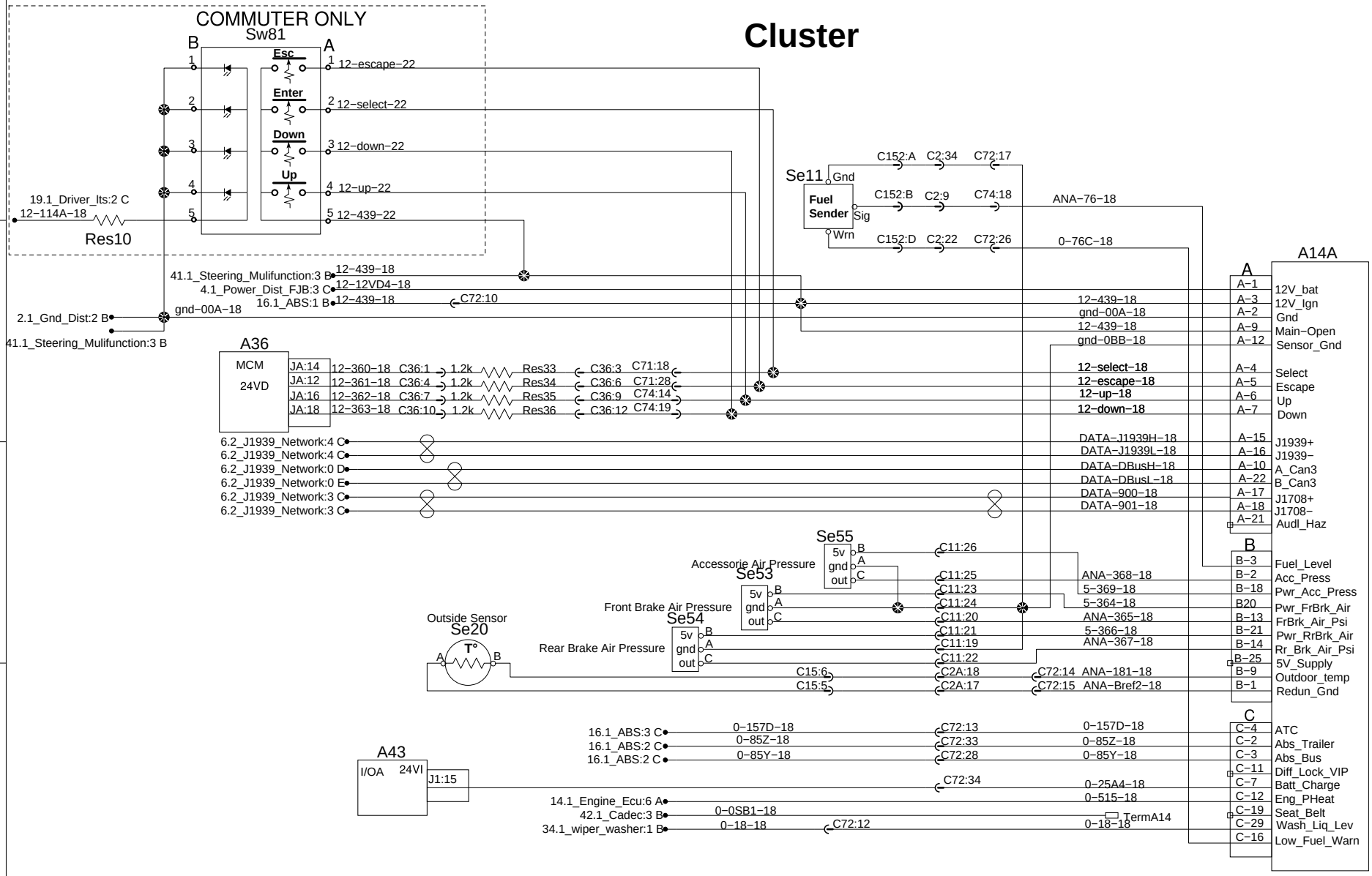

PREVOST®	WIRING DIAGRAM	No:D061150	Page:10.1	Rev:03