# Direct lightning

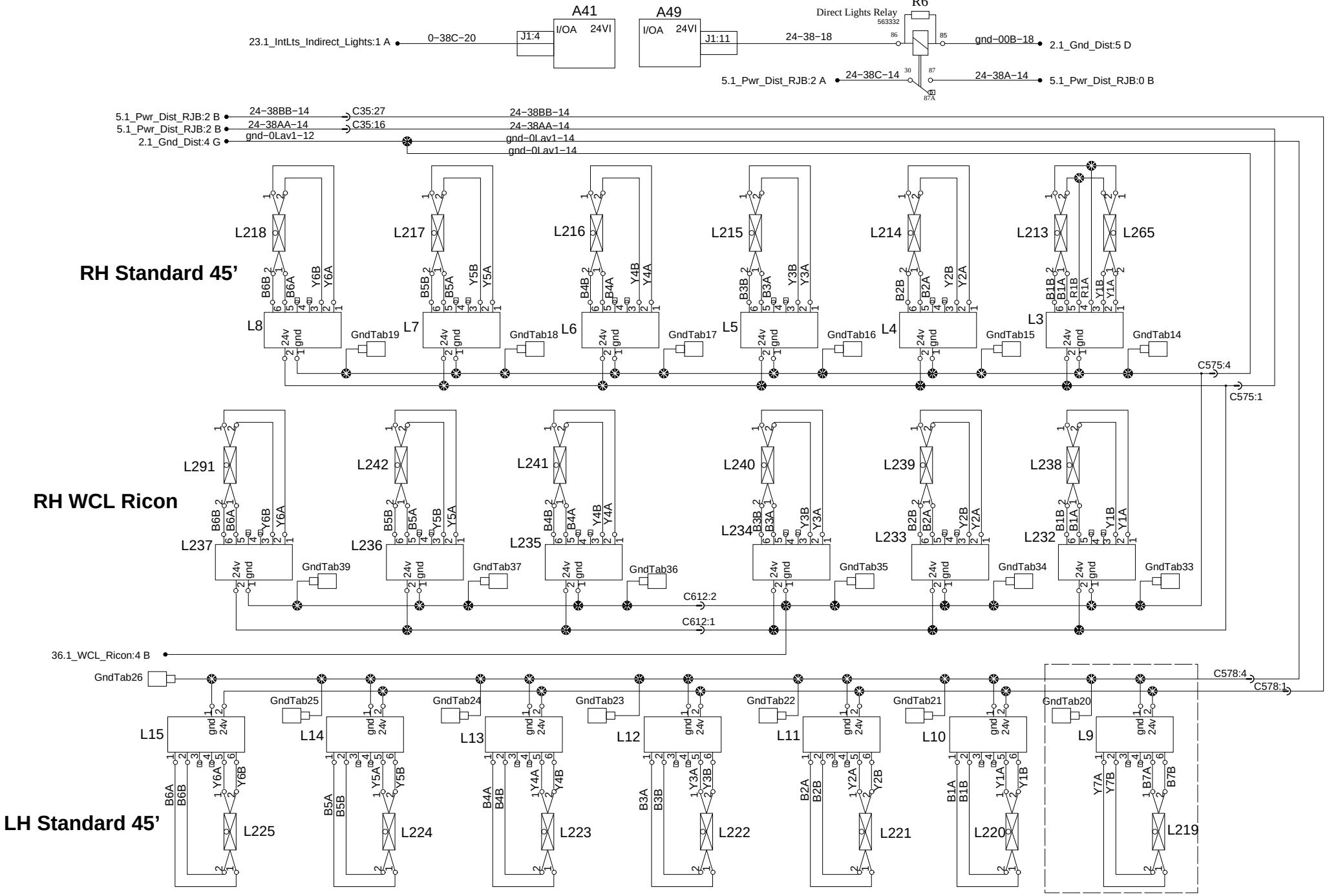


| | | | |
|---|---|---|---|
| PREVOST® | WIRING DIAGRAM | No:D061150 | Page:24.1 | Rev:00 |