DESTINATION SIGN SPECIAL POWER HARNESS (TWISTED & SHIELDED)
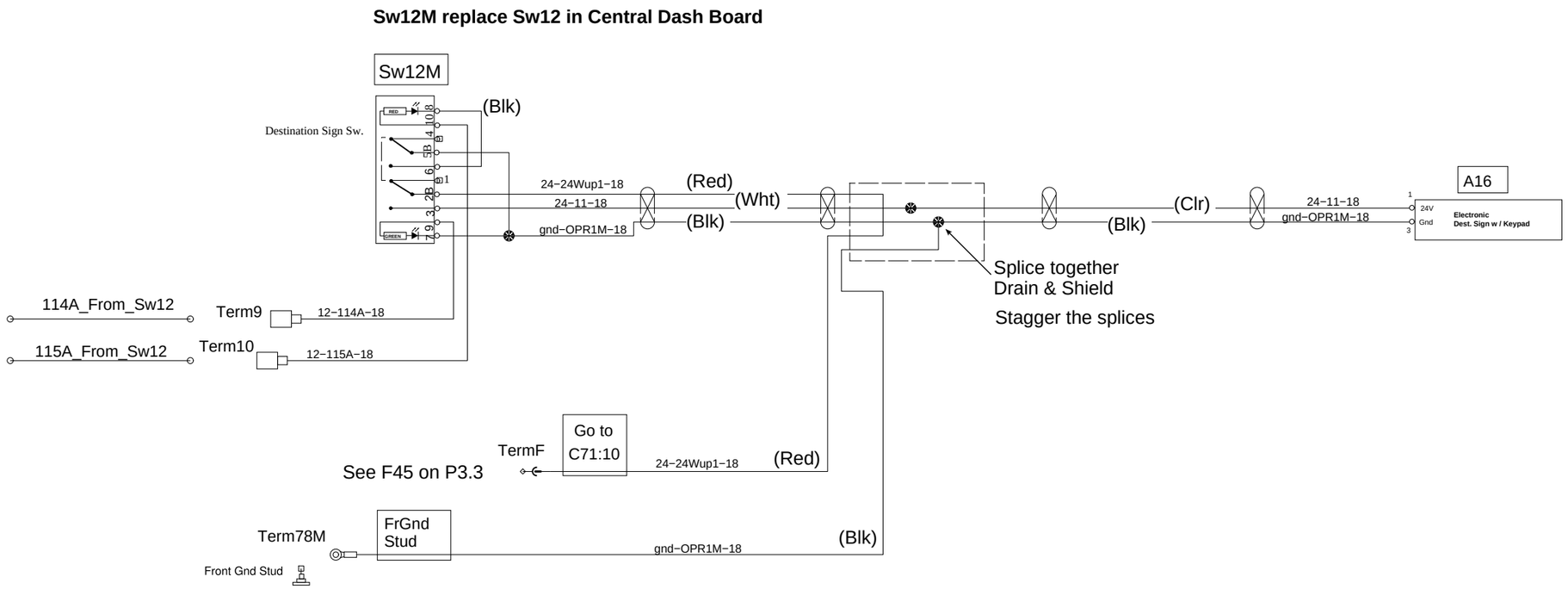
WIRING HARNESS PART NO. 067175