MAIN DISTRIBUTION Batteries & Ignition

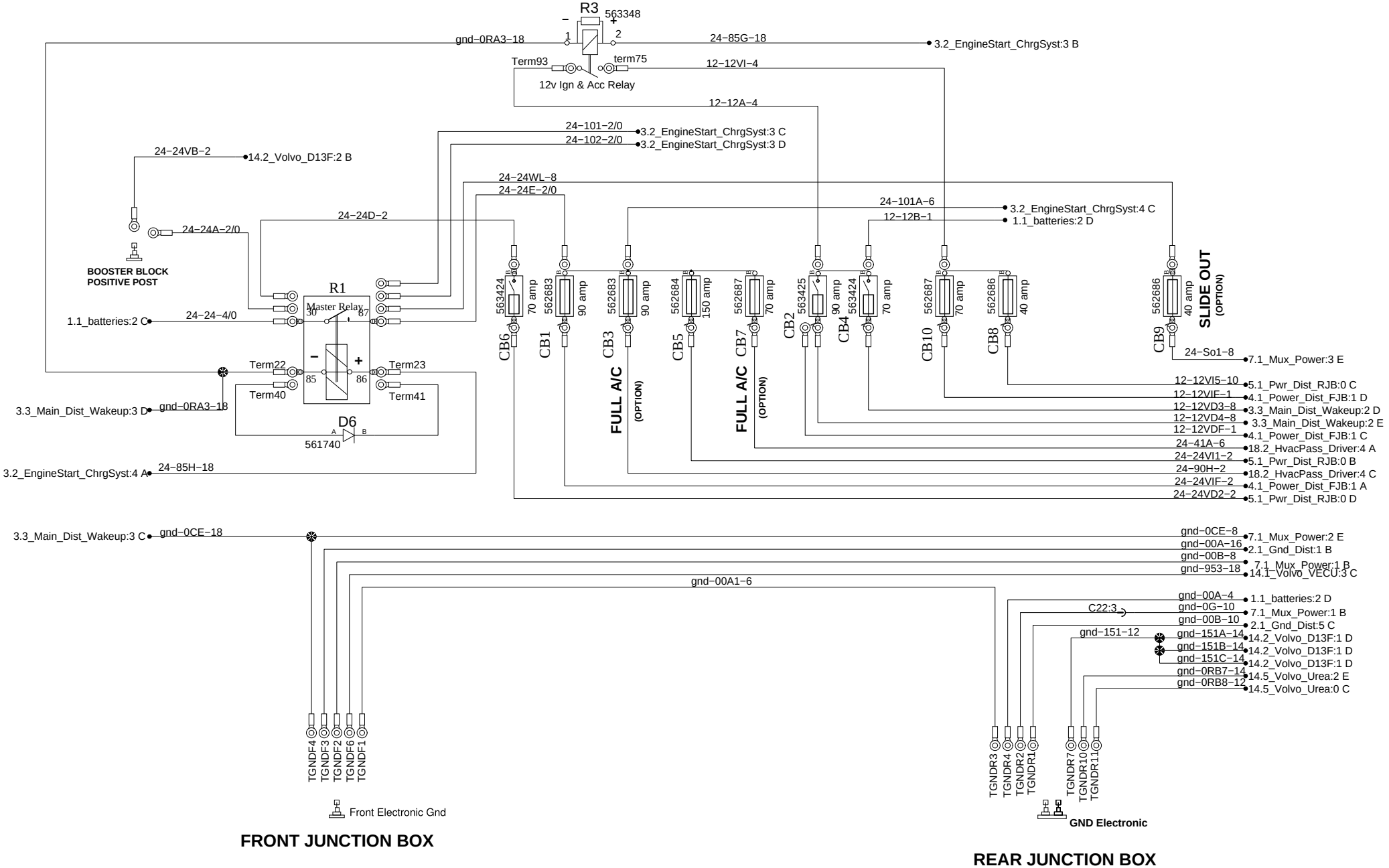

PREVOST®	WIRING DIAGRAM	No:D061160	Page:3.1	Rev:06