ESP

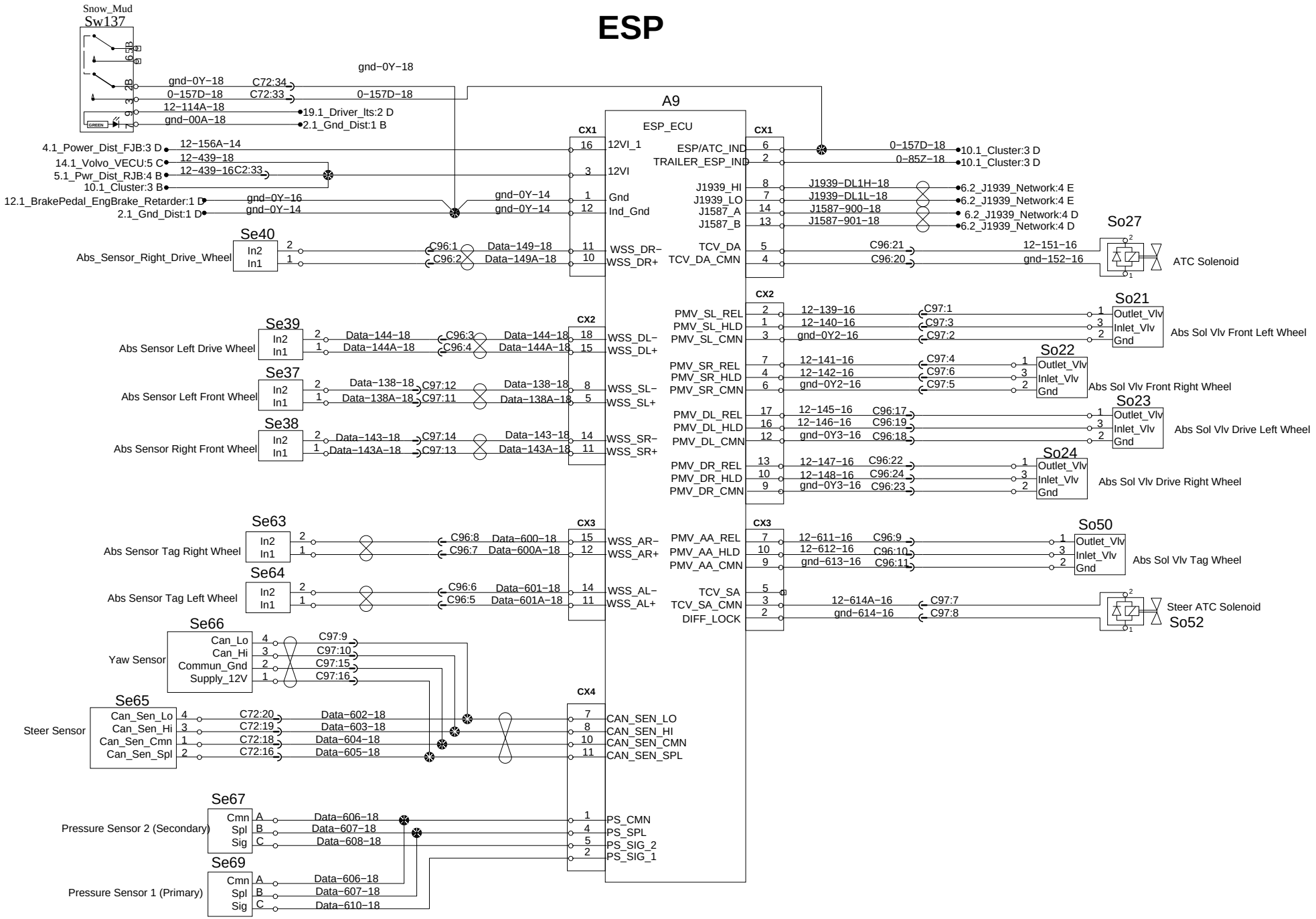

PREVOST®	WIRING DIAGRAM	No:D061170	Page:16.1	Rev:06