Tire Pressure Monitoring System

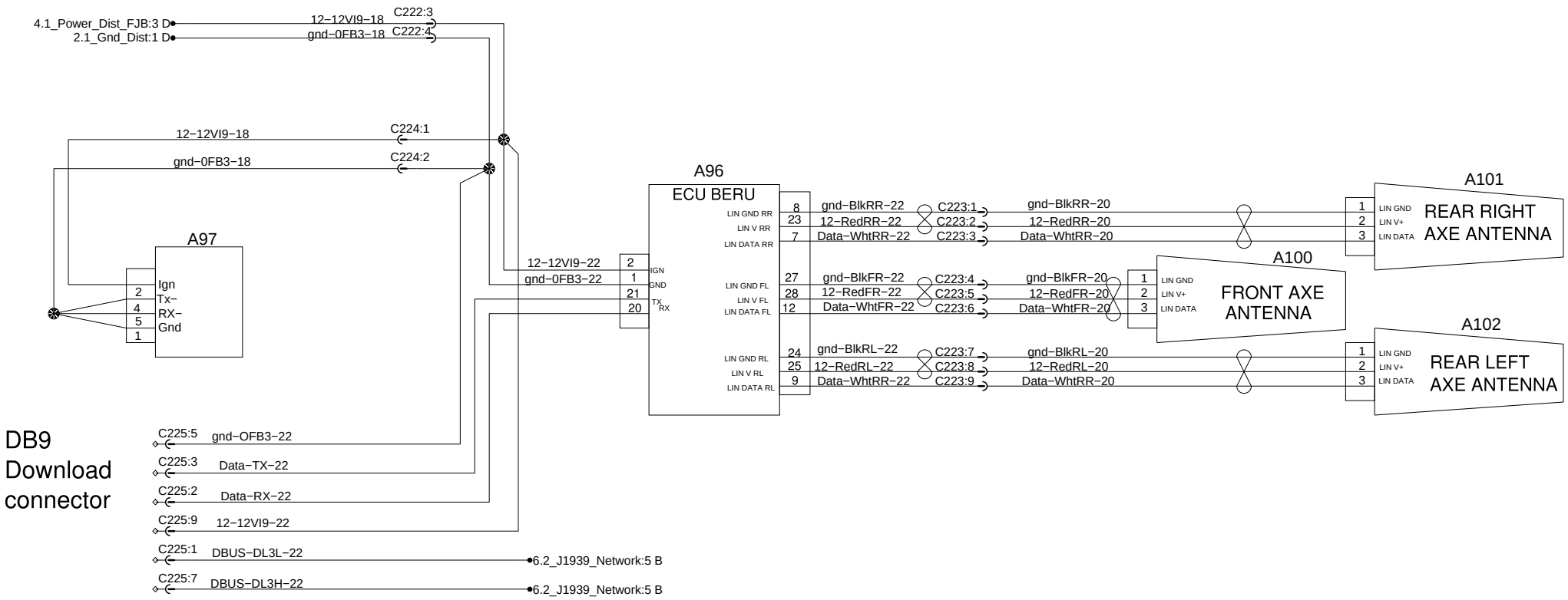

PREVOST®	WIRING DIAGRAM	No:D061170	Page:33.1	Rev:06