BATTERIES

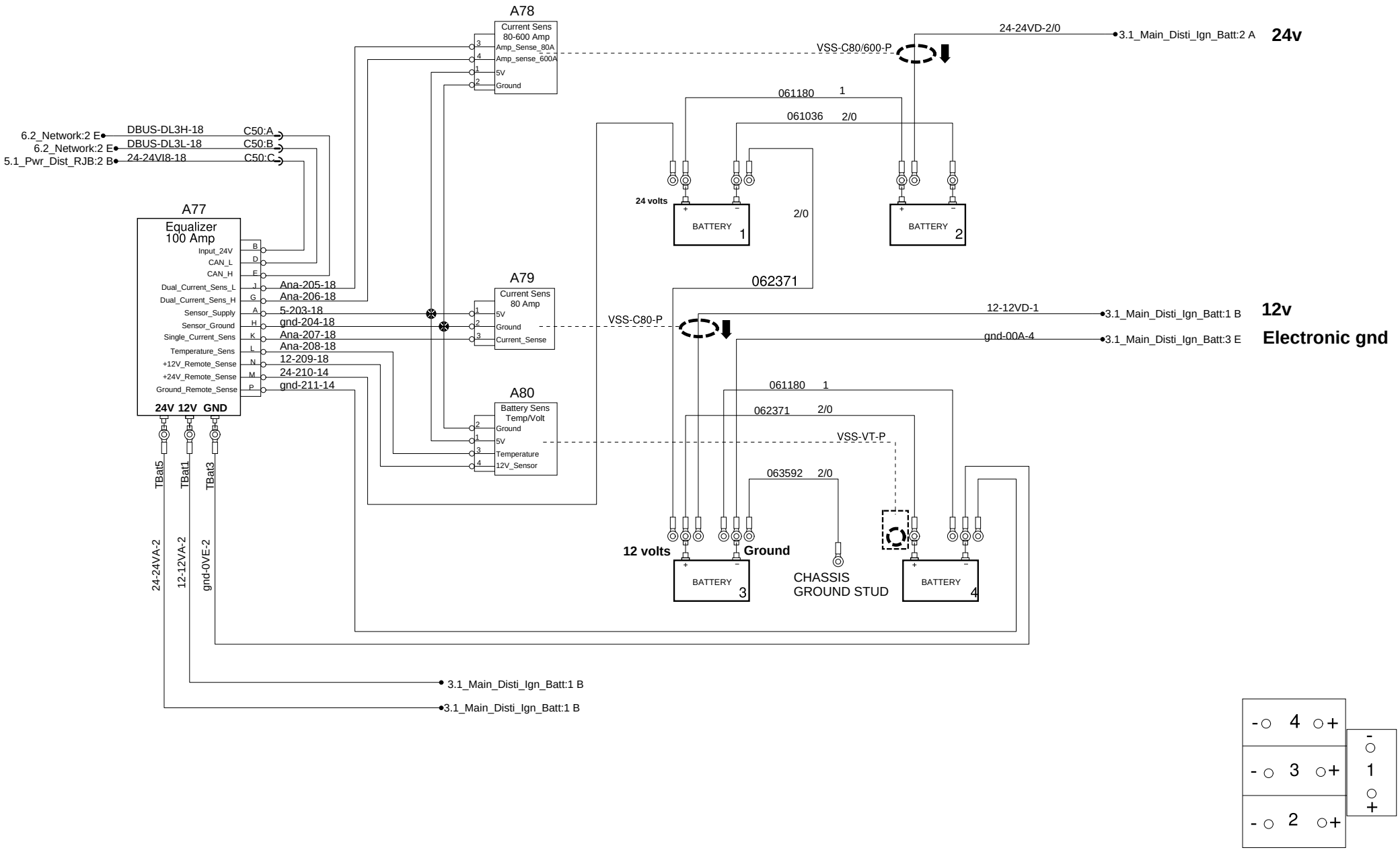

PREVOST®	WIRING DIAGRAM	No:D061340	Page:1.1	Rev:0