Kneeling, tag and Low Buoy

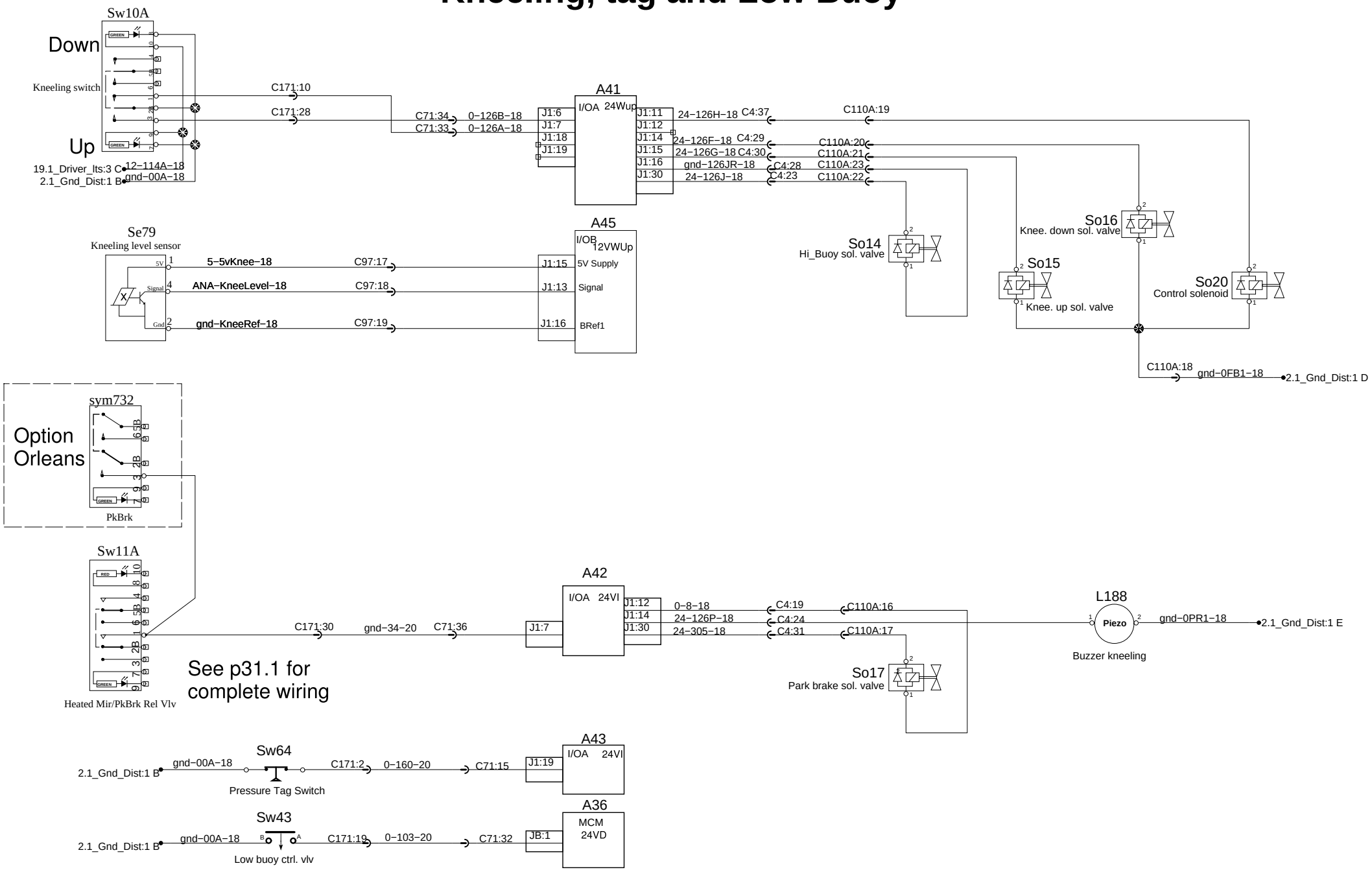

PREVOST®	WIRING DIAGRAM	No:D061340	Page:32.1	Rev:18