CTGI - Customer Telematic Gateway Interface
J1939

CUSTOMER ADAPTATION

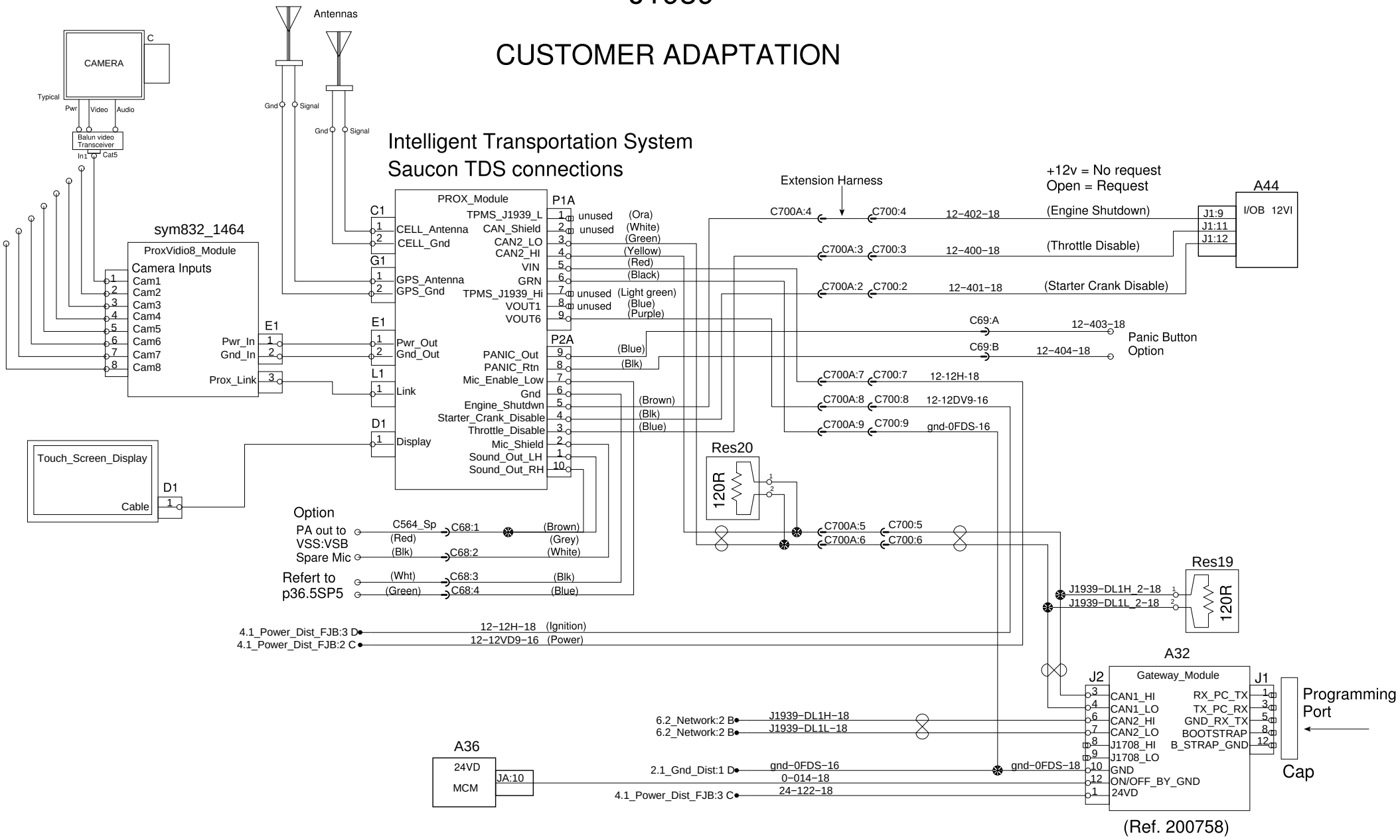

PREVOST®	WIRING DIAGRAM	No:D061340	Page:42.3 SP1	Rev:01