2 MEDIA PLAYER HDMI (SPECIAL REQUEST)

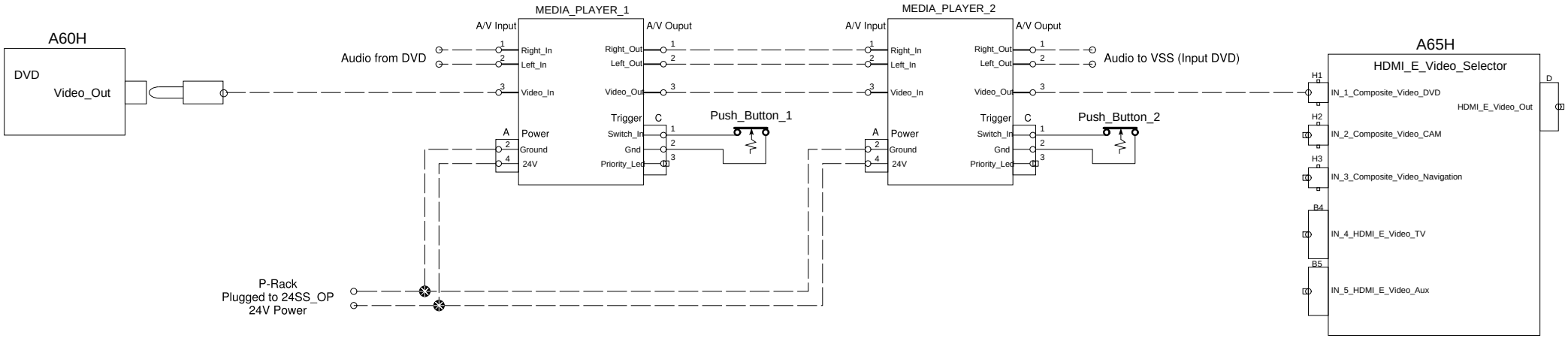

PREVOST®	WIRING DIAGRAM	No:D061340	Page:60.6	Rev:0