Marker Lights Additionnal

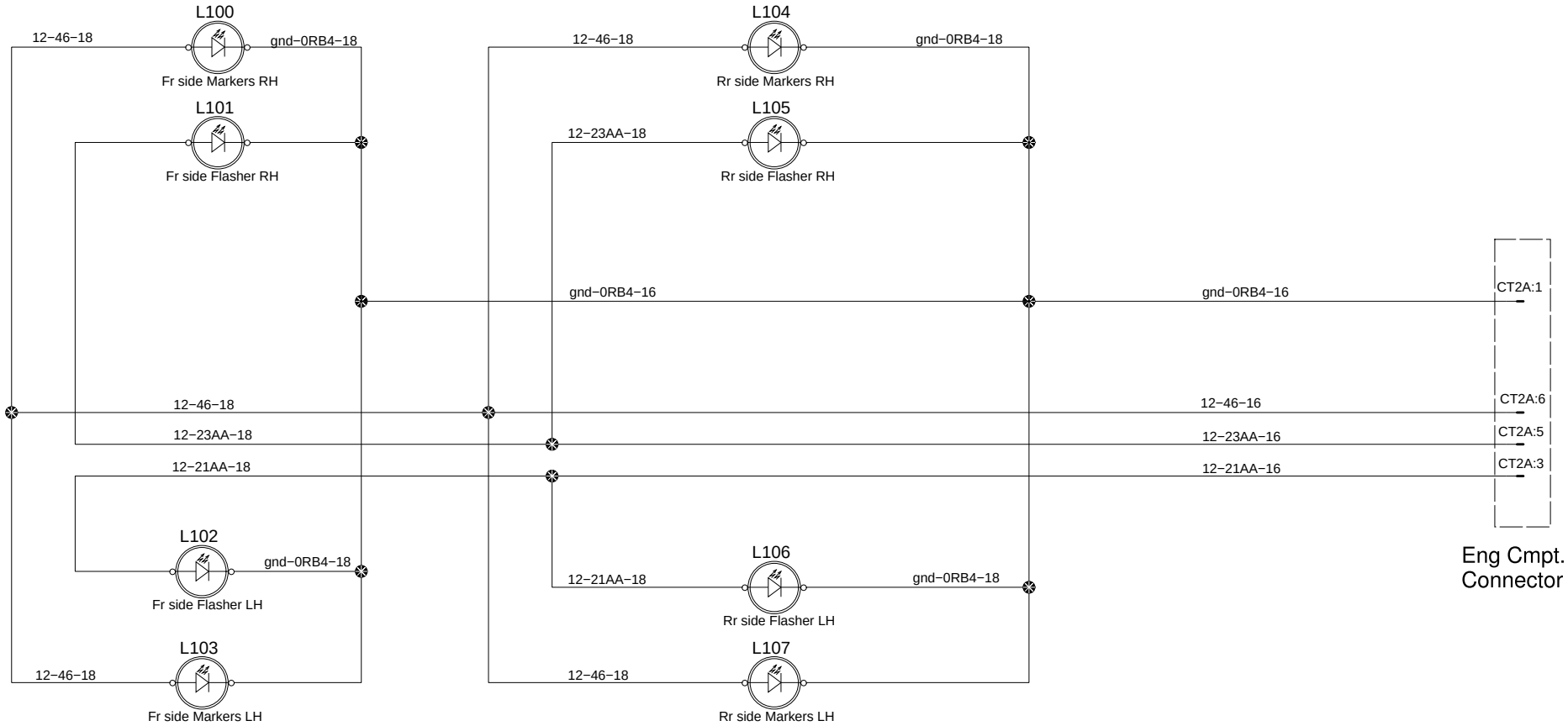

PREVOST®	WIRING DIAGRAM	No:D061340	Page:60.9	Rev:00