Parcel Rack A/C System

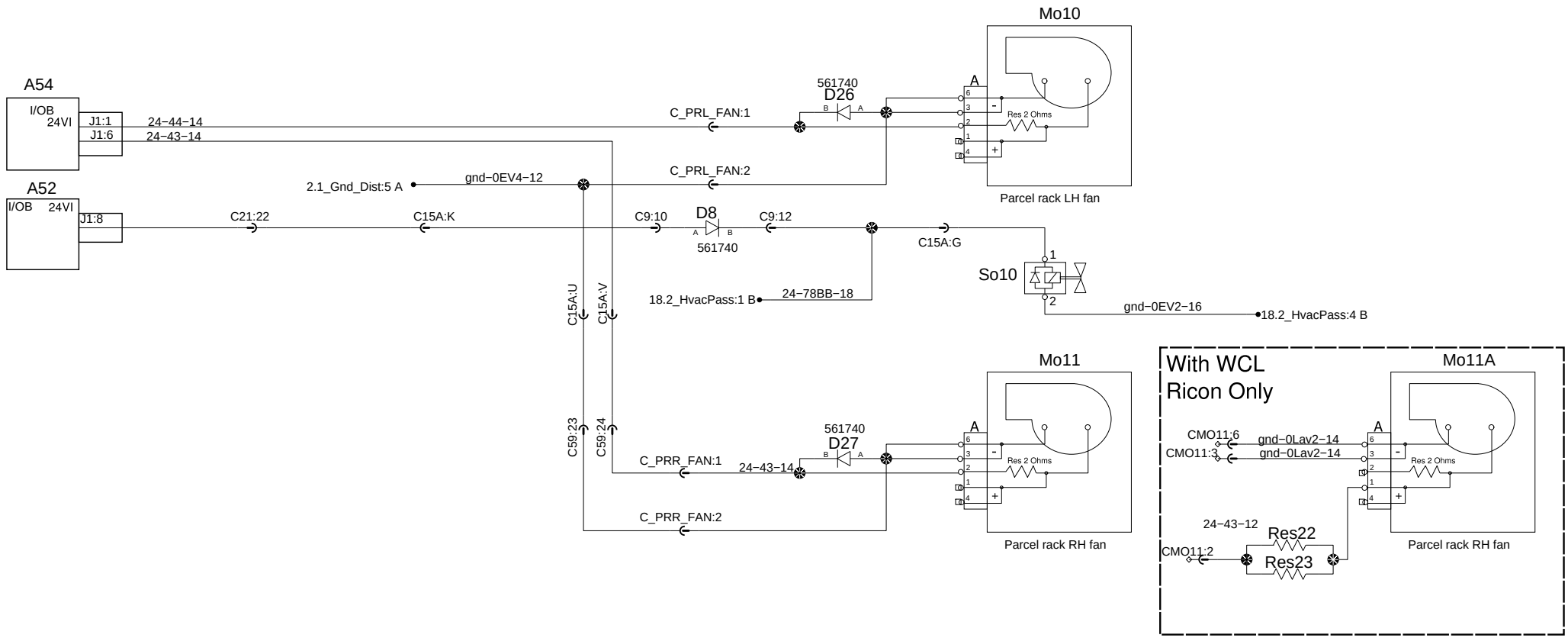

PREVOST®	WIRING DIAGRAM	No:D061350	Page:18.3	Rev:5