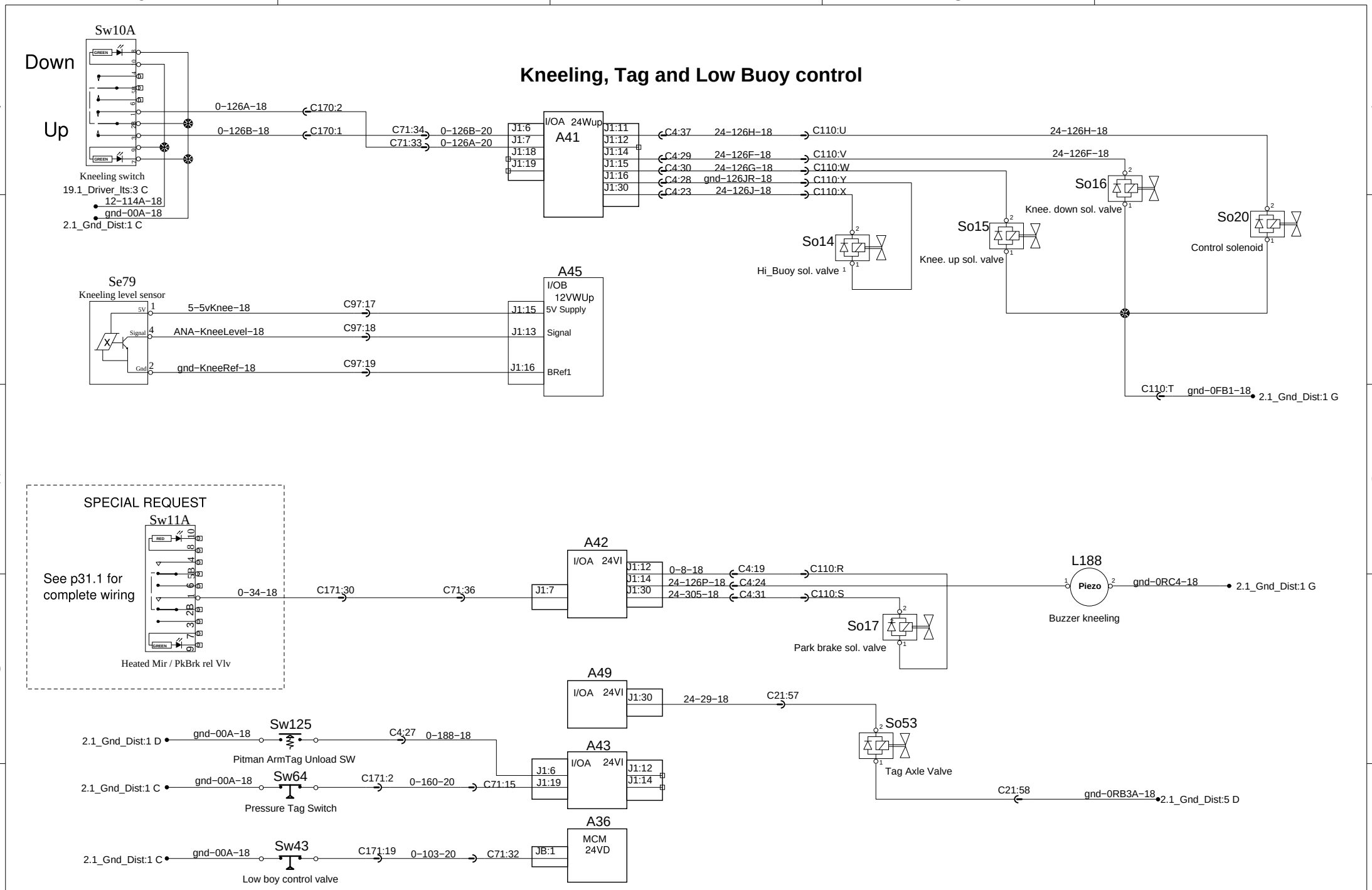

PREVOST®	WIRING DIAGRAM	No:D061350	Page:32.1	Rev:11