Indicator Light Weight

Front axle

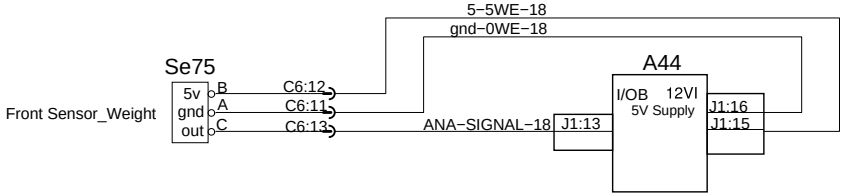
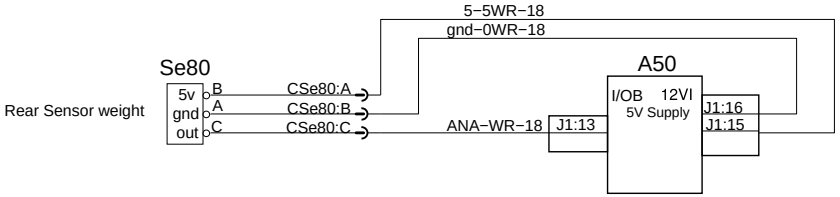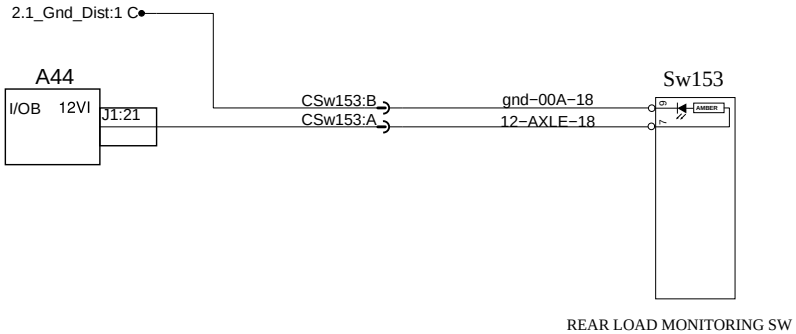
Rear axle