Multiplex Power Supply Distribution

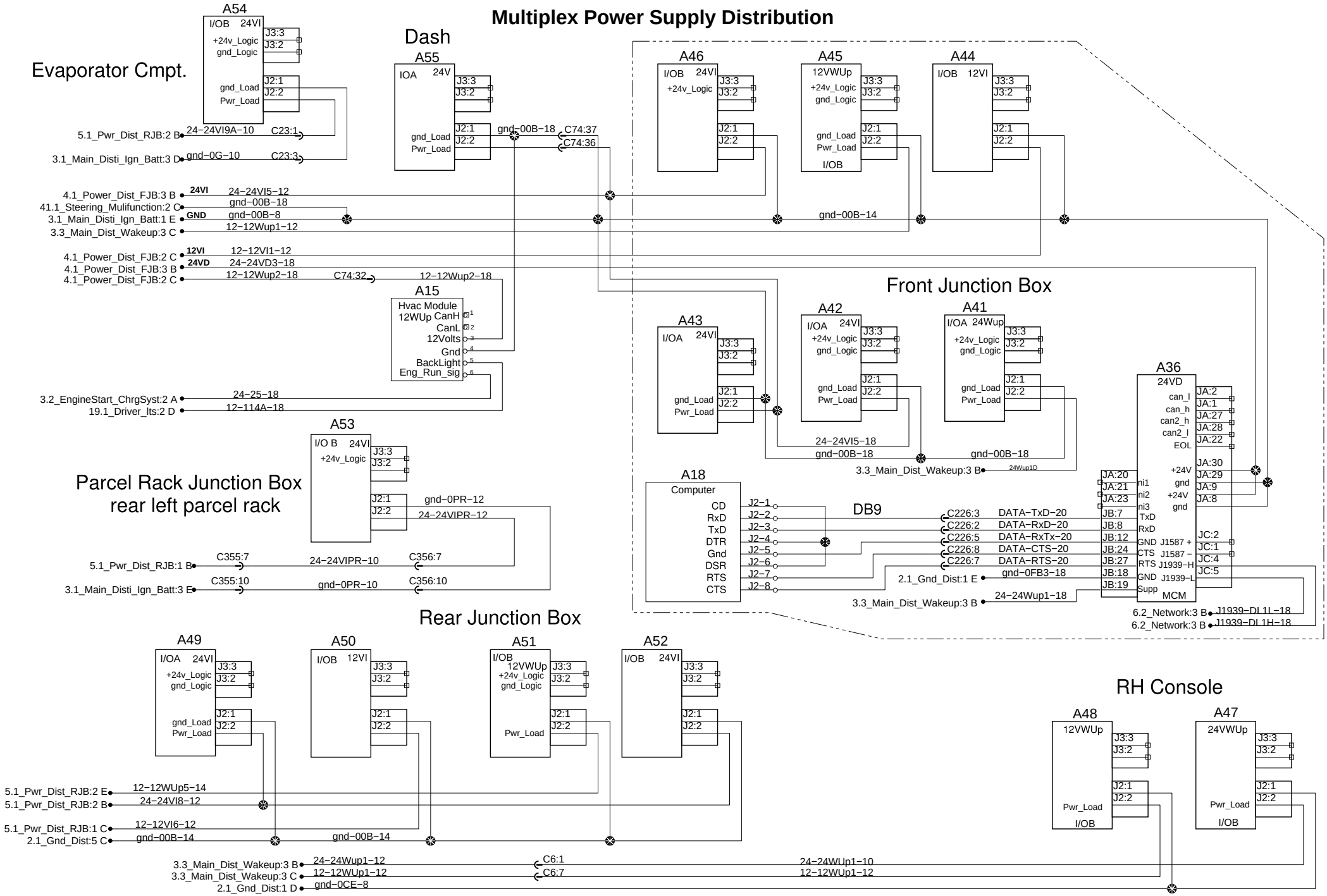

PREVOST®

WIRING DIAGRAM

No:D061350

Page:7.1

Rev:0