Cluster

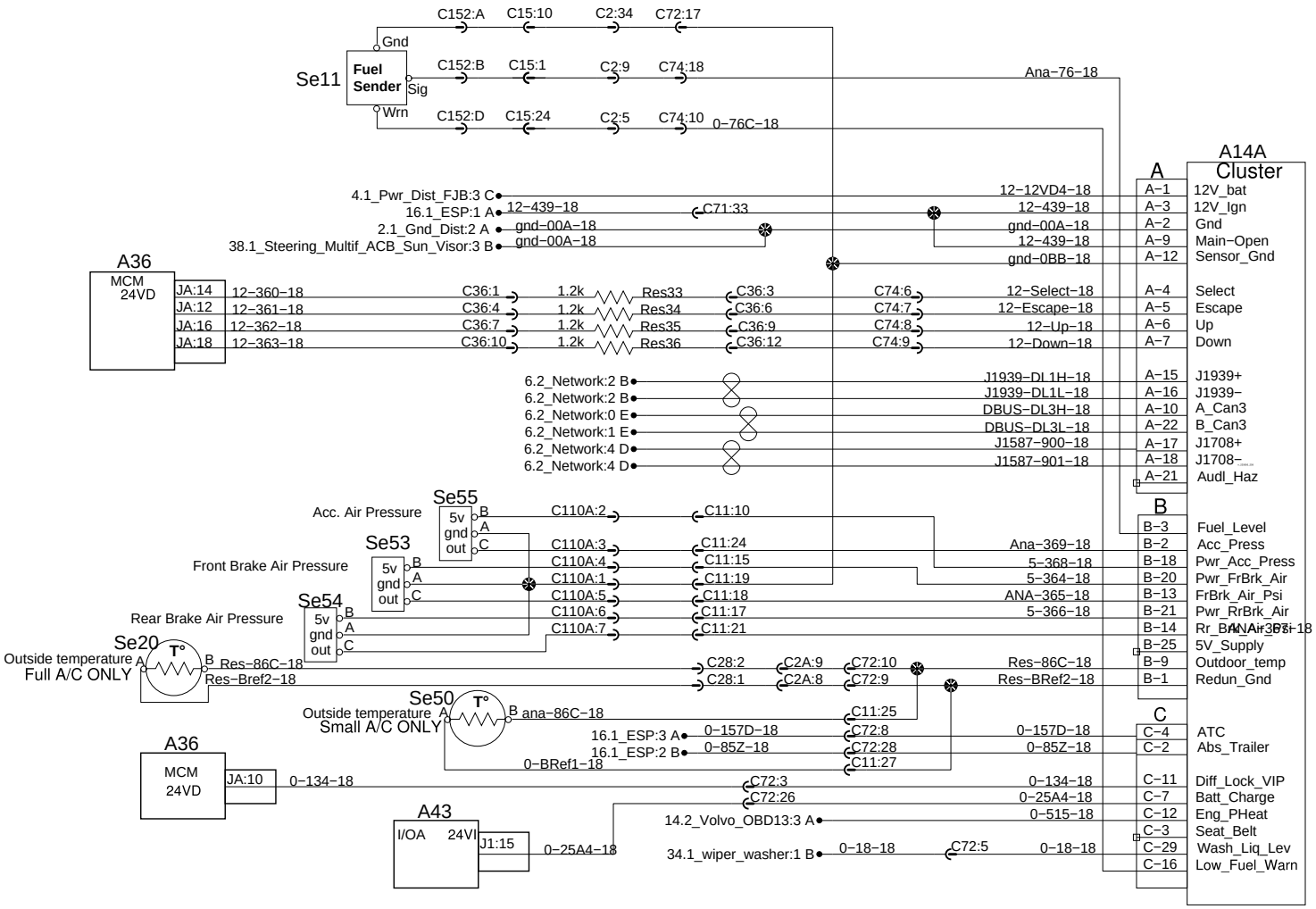

PREVOST®	WIRING DIAGRAM	No:D061360	Page:10.1	Rev:13−1