# Brake, Engine Brake and Retarder

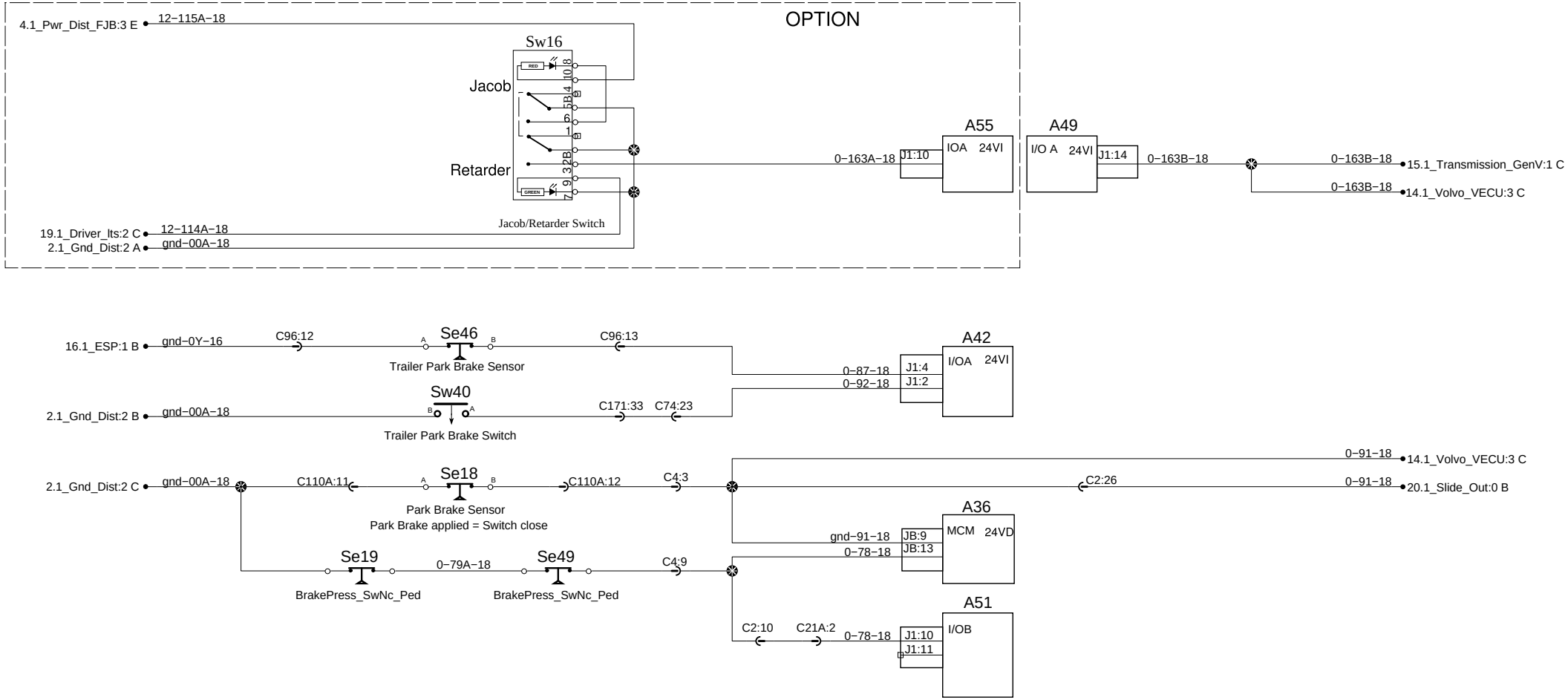


| PREVOST® | WIRING DIAGRAM | No:D061360 | Page:12.1 | Rev:13−1 |
|---|---|---|---|---|