Hvac

Wiring identifiers

Full A/C only
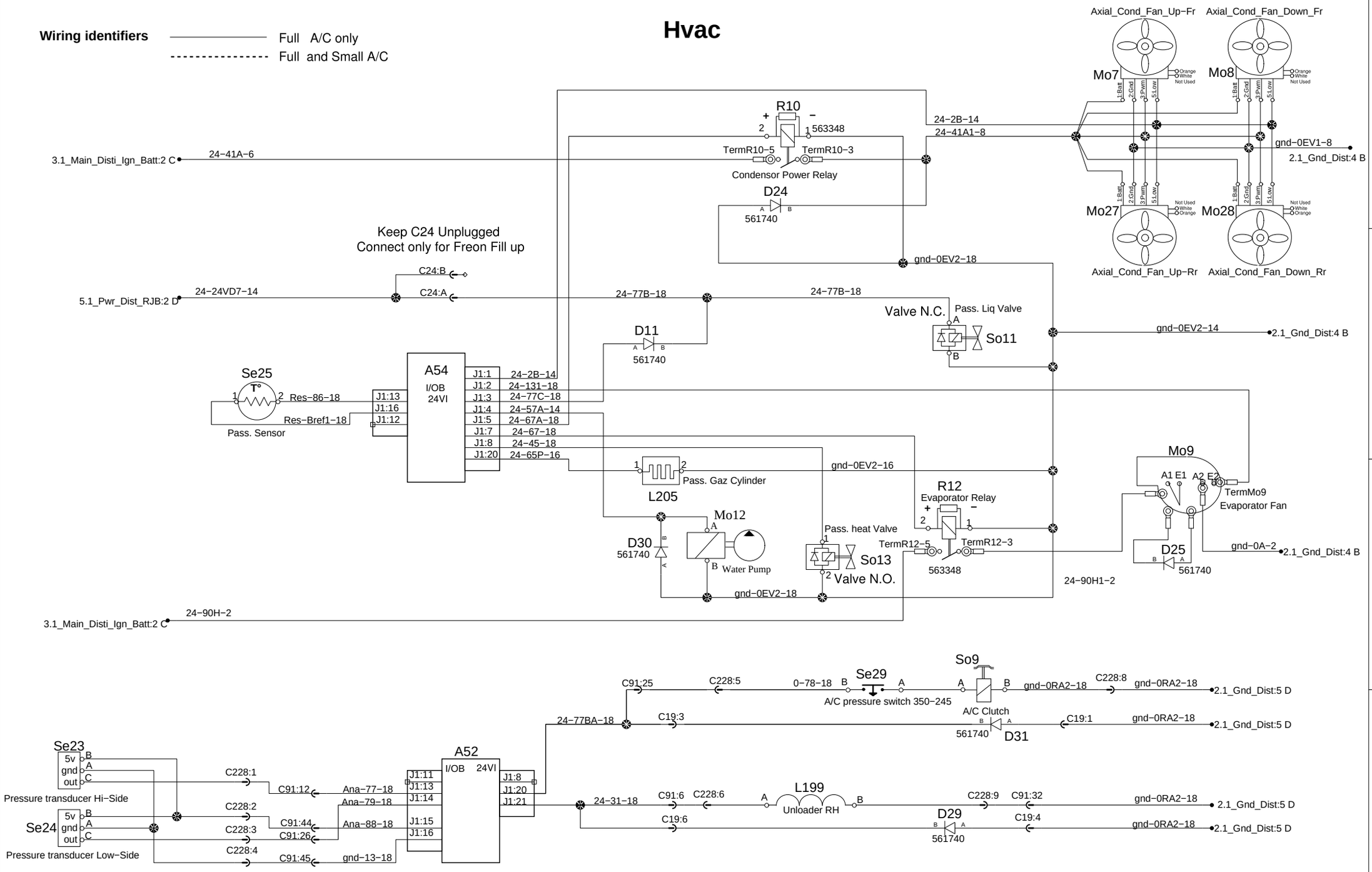
Full and Small A/C