REAR RIGHT SLIDE OUT OPTION

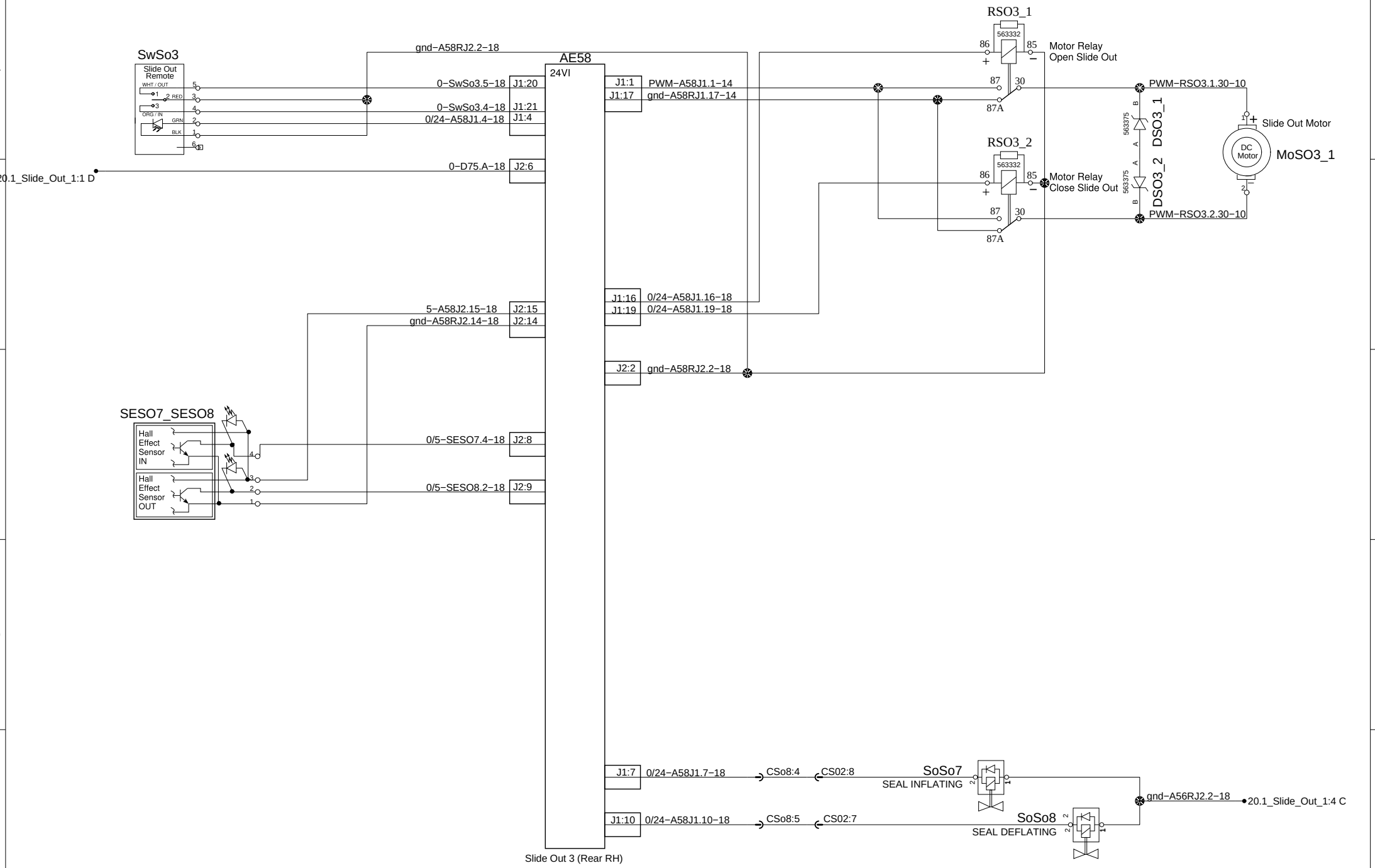

PREVOST®	WIRING DIAGRAM	No:D061360	Page:20.3	Rev:16