Luggage Compartment and Engine cmpt. lighting

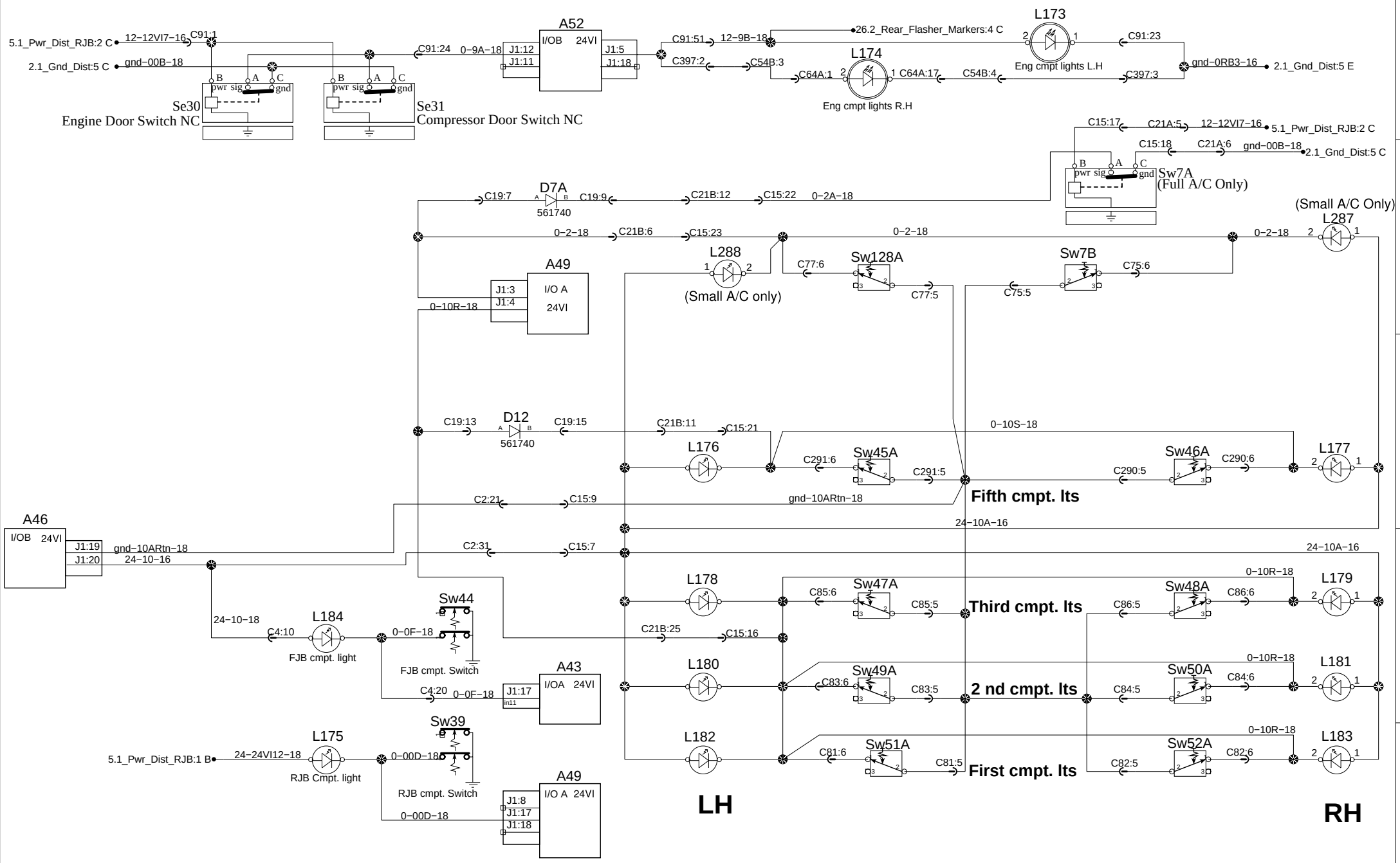

PREVOST®	WIRING DIAGRAM	No:D061360	Page:25.1	Rev:16