# Fog's Lights and Cornering Lights and Alarm

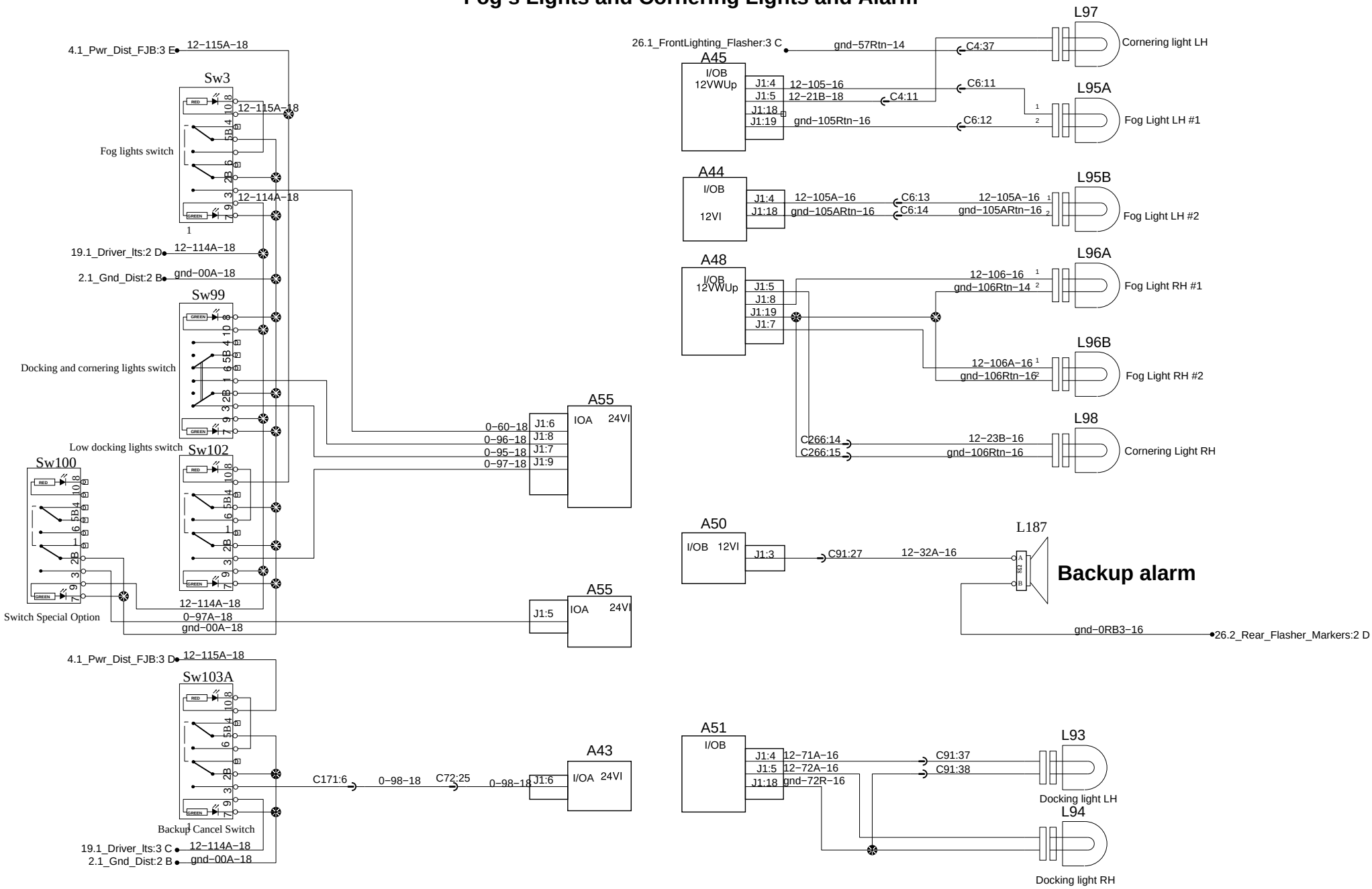


| PREVOST® | WIRING DIAGRAM | No:D061360 | Page:26.3 | Rev:10 |
|---|---|---|---|---|