Entrance Door (Keyless Entry System)

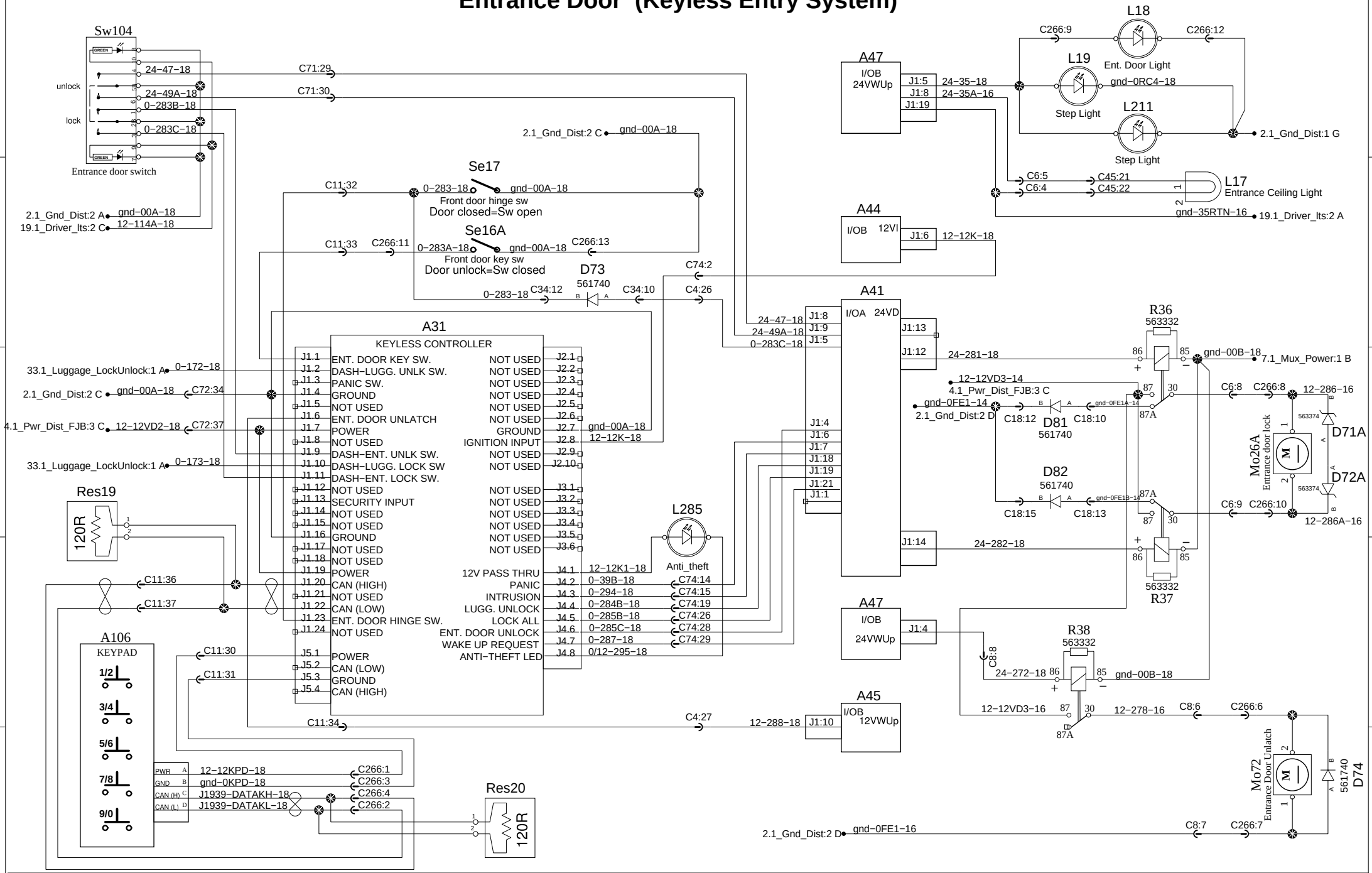

PREVOST®

WIRING DIAGRAM

No:D061360

Page:29.1

Rev:13