Rear Flashers, Markers, Tail and Stop Lights

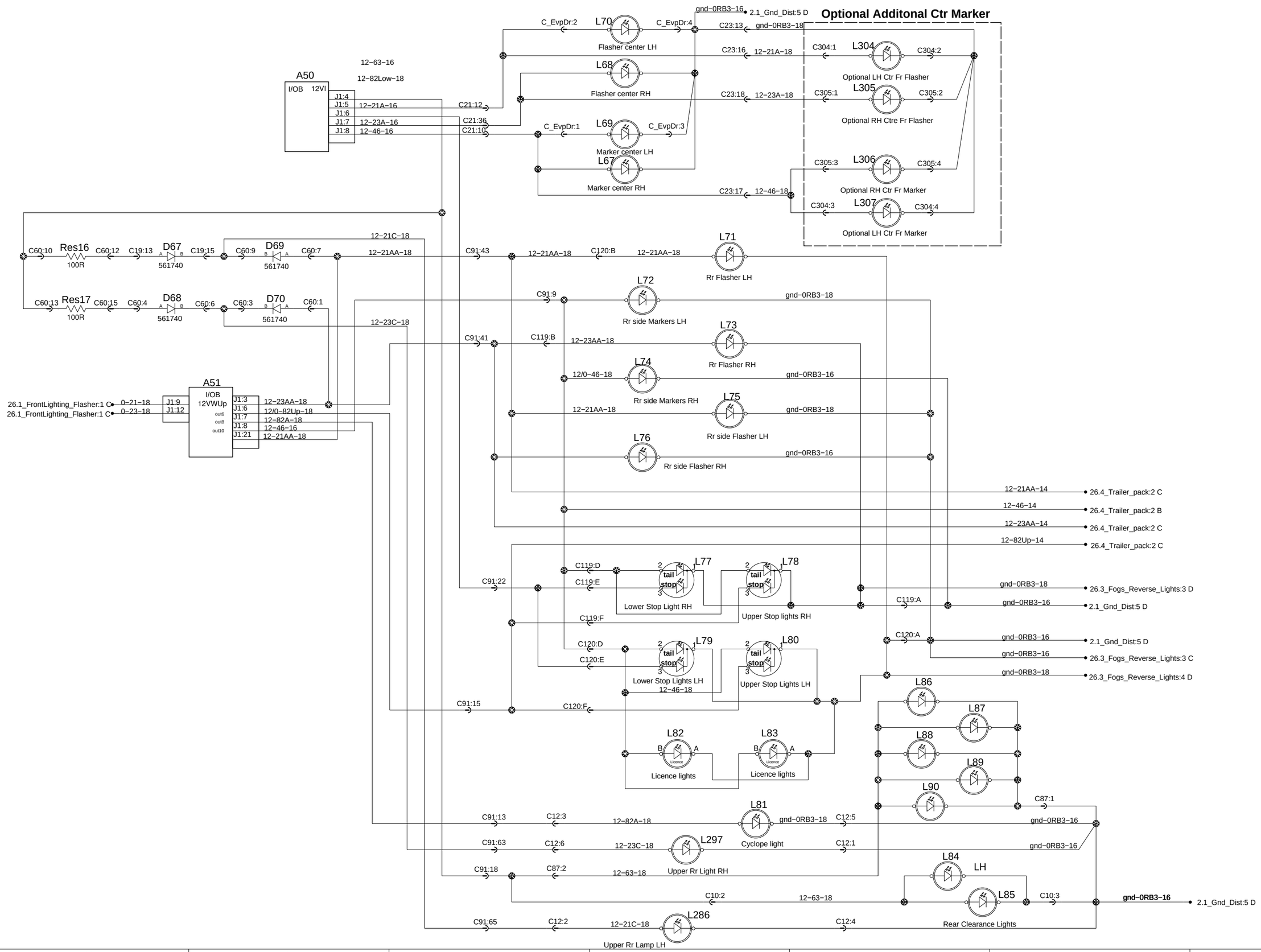

Rev:0

Page:26.2

No:D061370

WIRING DIAGRAM

PREVOST®