# Steering Multifunctions & Sun Visor& ACCR

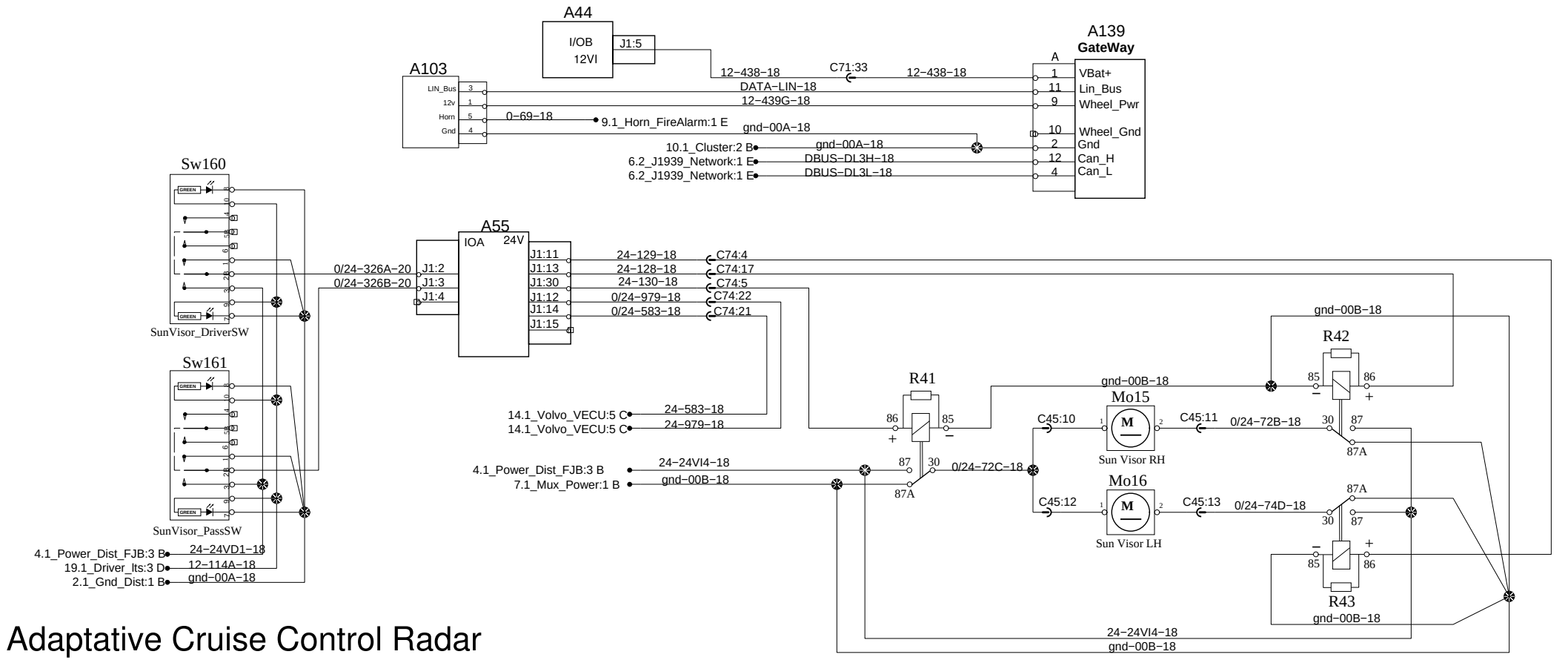


# Adaptative Cruise Control Radar

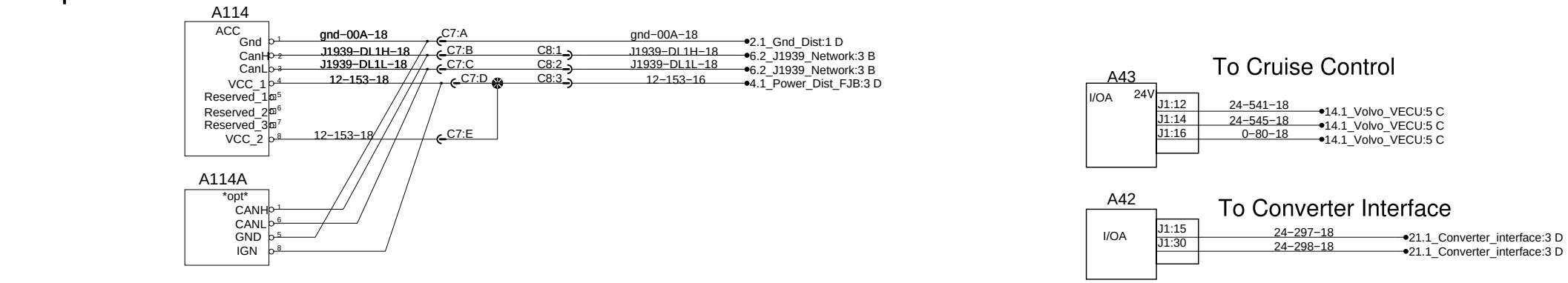


| PREVOST® | WIRING DIAGRAM | No:D061370 | Page:32.1 | Rev:14 |
|---|---|---|---|---|