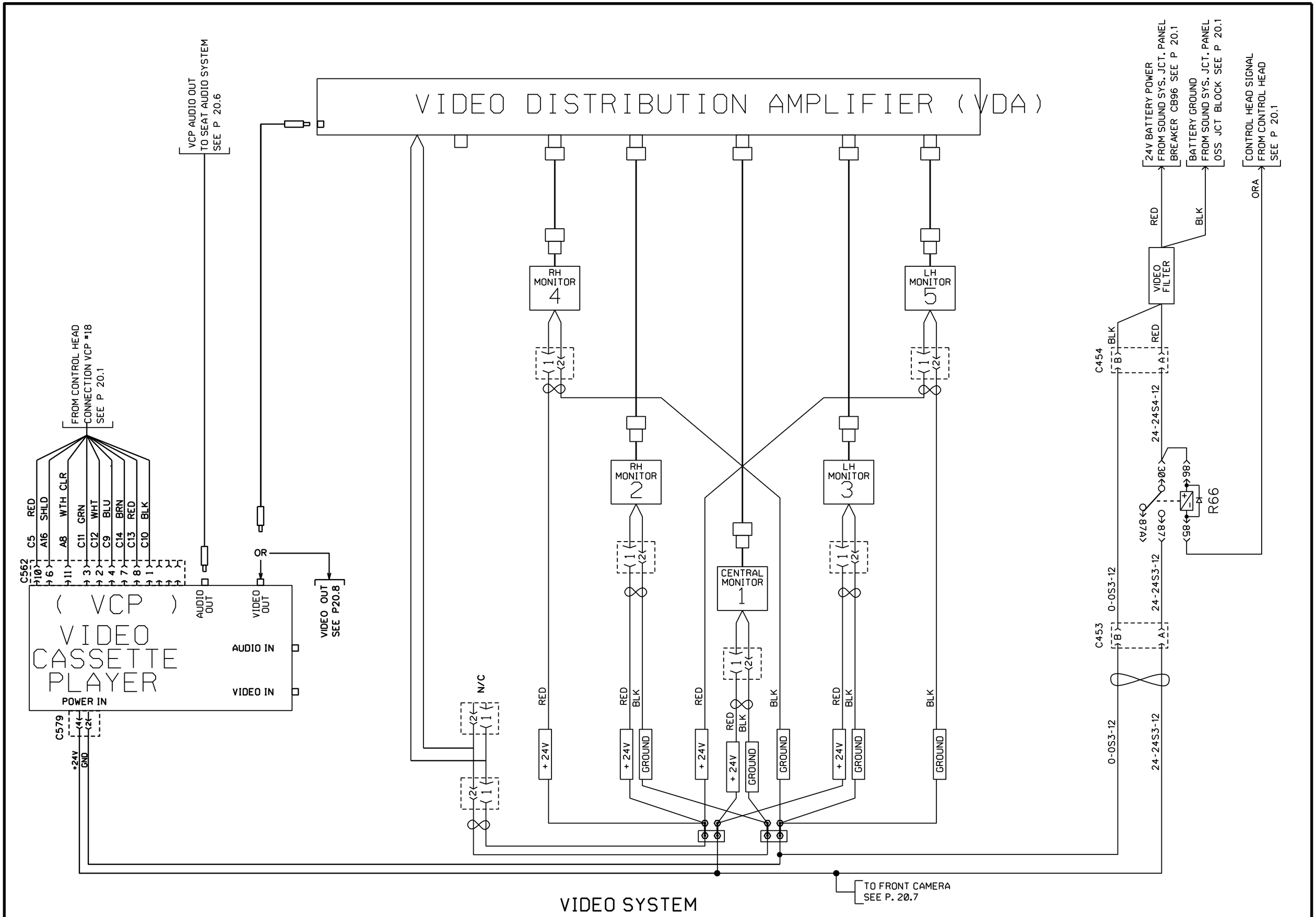

VIDEO SYSTEM

PREVOST	WIRING DIAGRAM	NO: D060949	PAGE: 20.3	REVISION 11