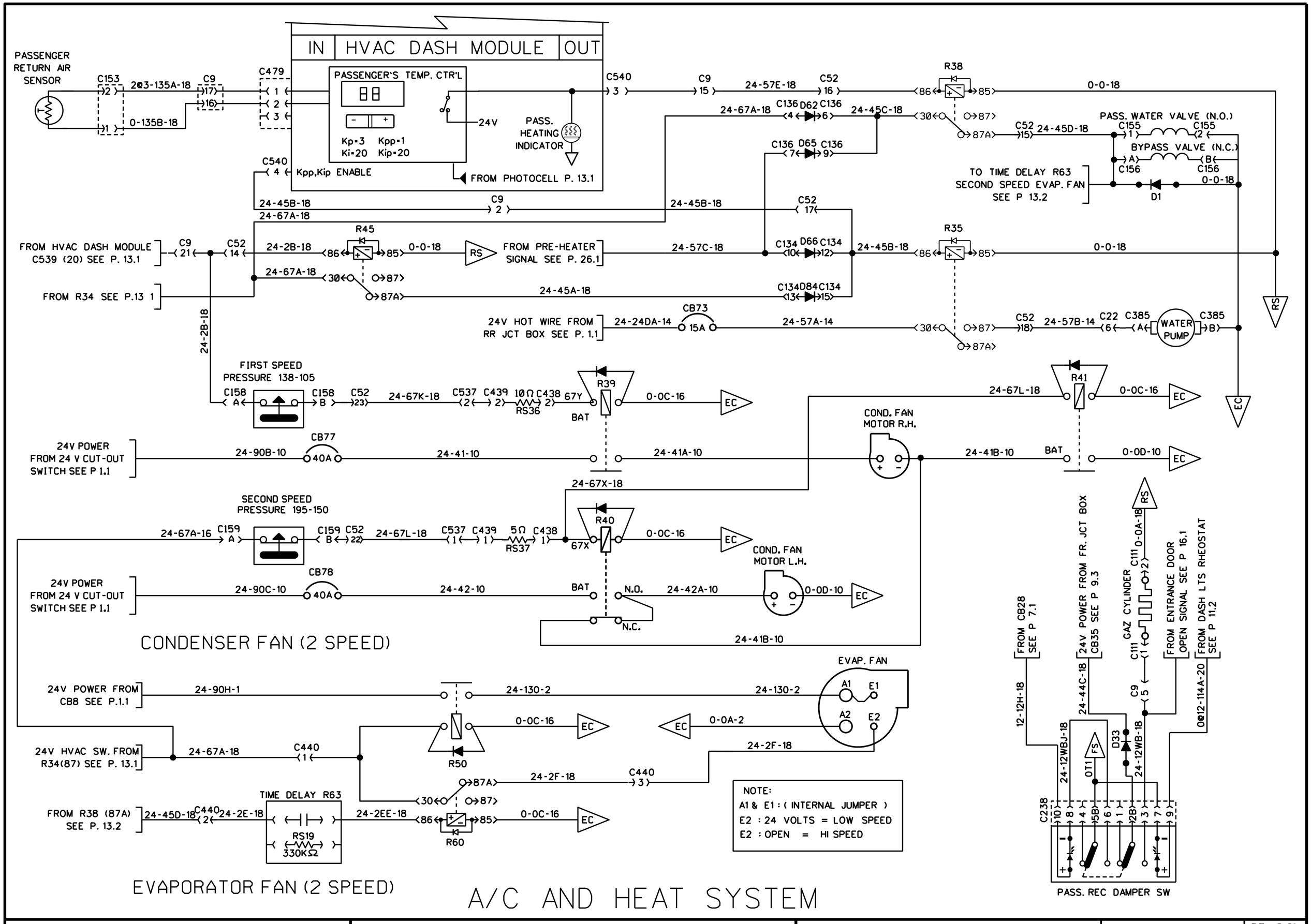

PREVOST	WIRING DIAGRAM	NO: D060976	PAGE: 13.2	REVISION 02