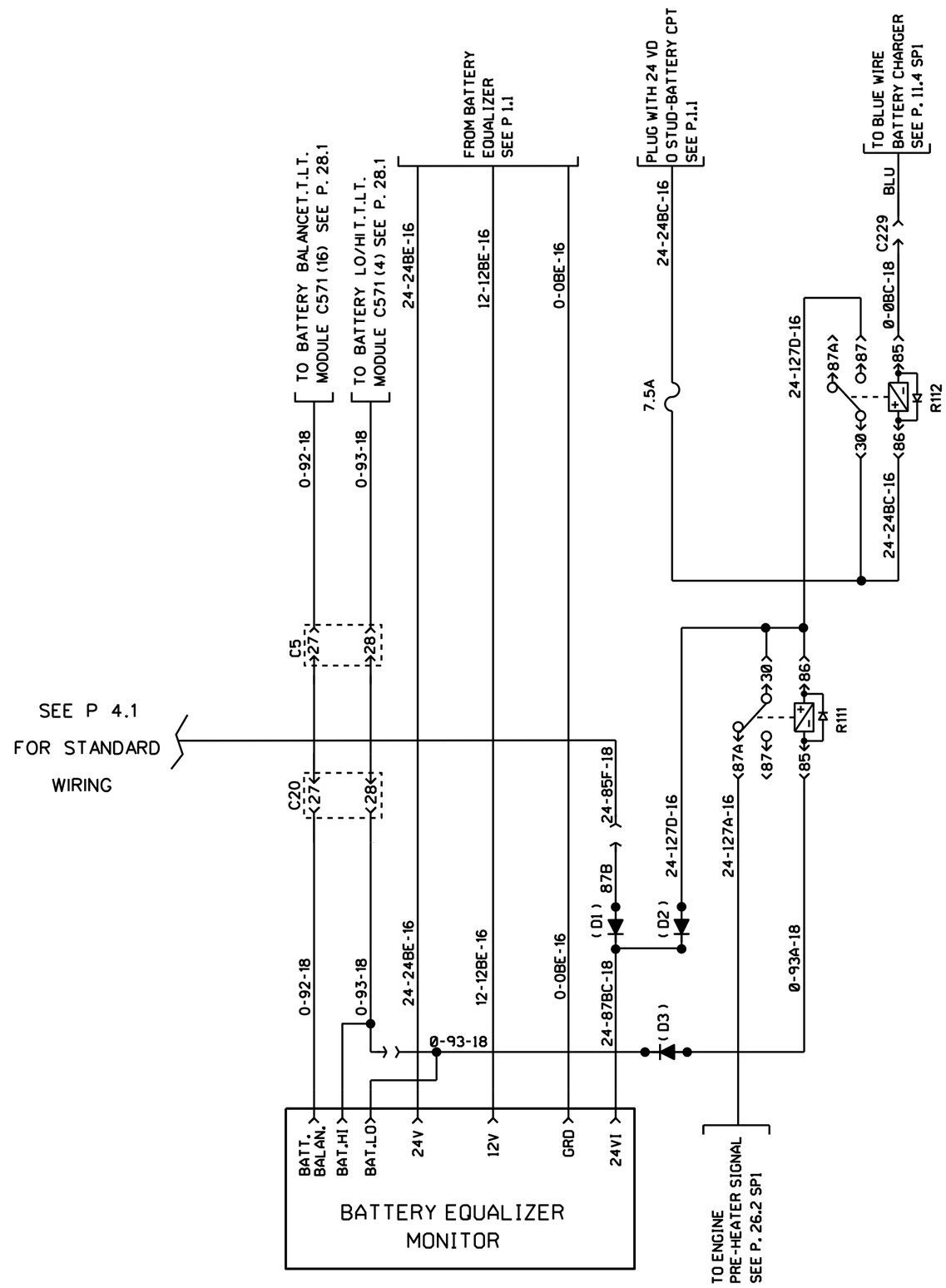

PRE-HEATER ON WITH CHARGER ON

PREVOST	WIRING DIAGRAM	NO: D060976	PAGE: 4.1sp3	REVISION 07