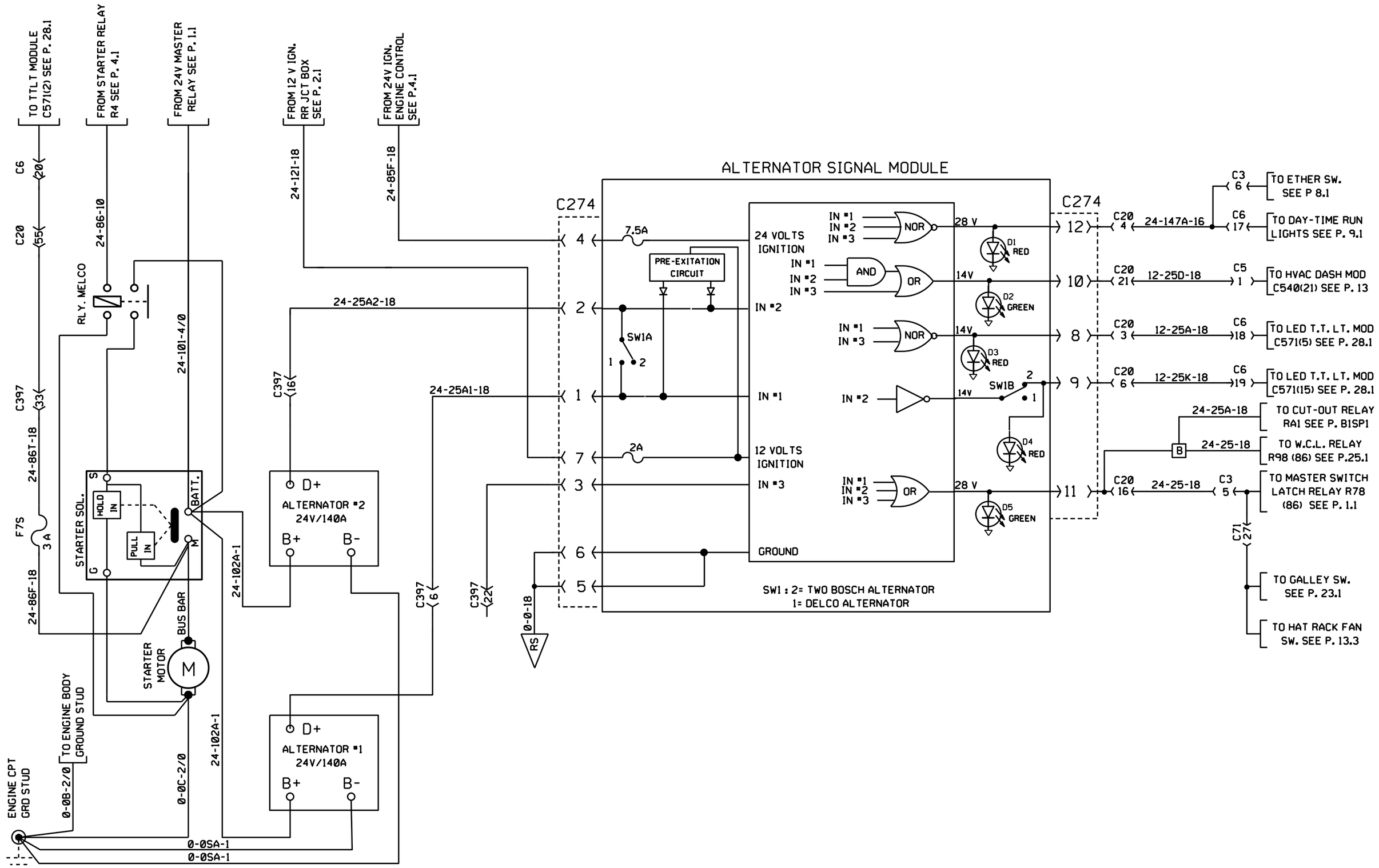

STARTER & BOSCH ALTERNATOR