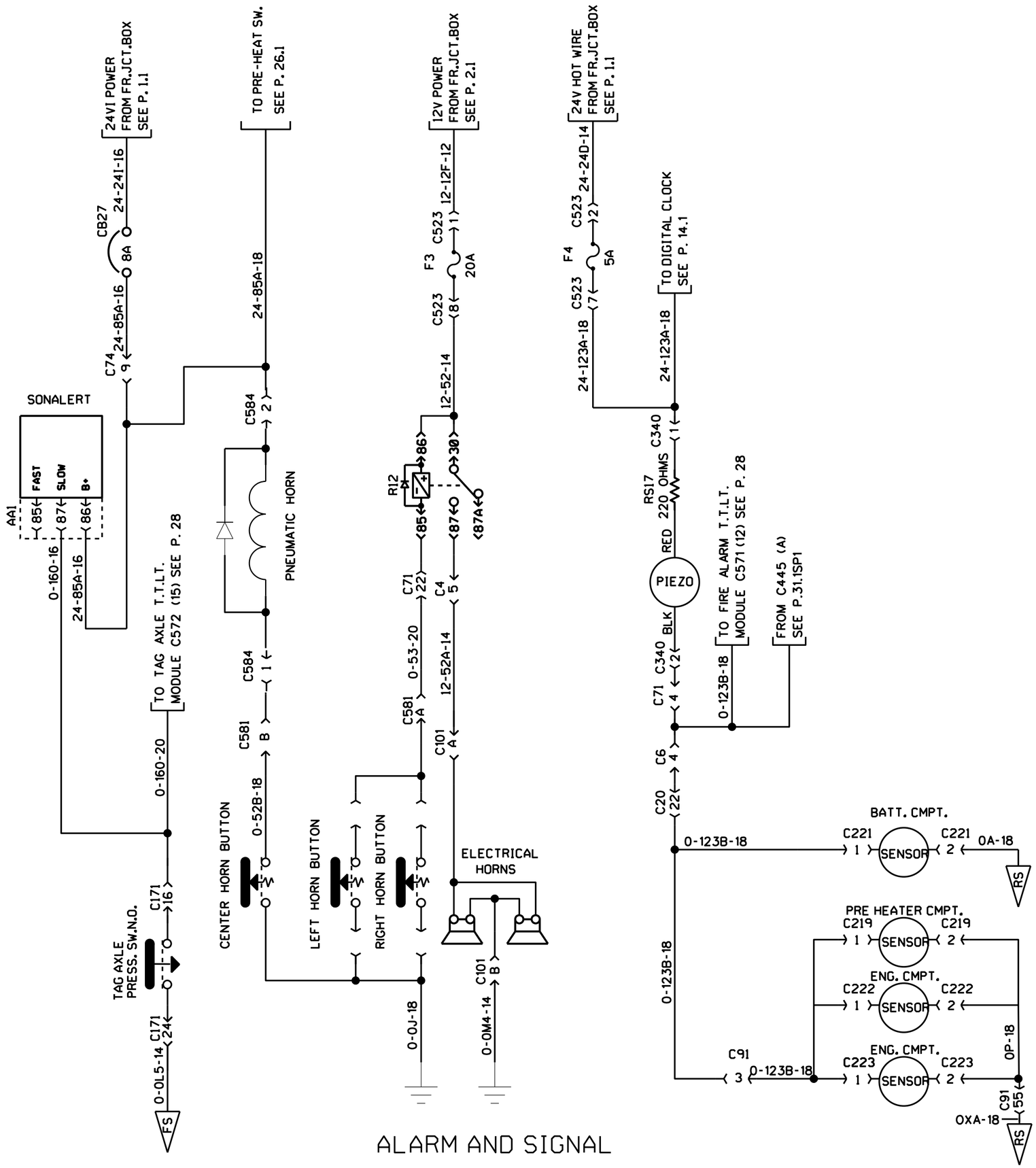

ALARM AND SIGNAL

PREVOST	WIRING DIAGRAM	NO: D060976	PAGE: 7.2sp3	REVISION 00