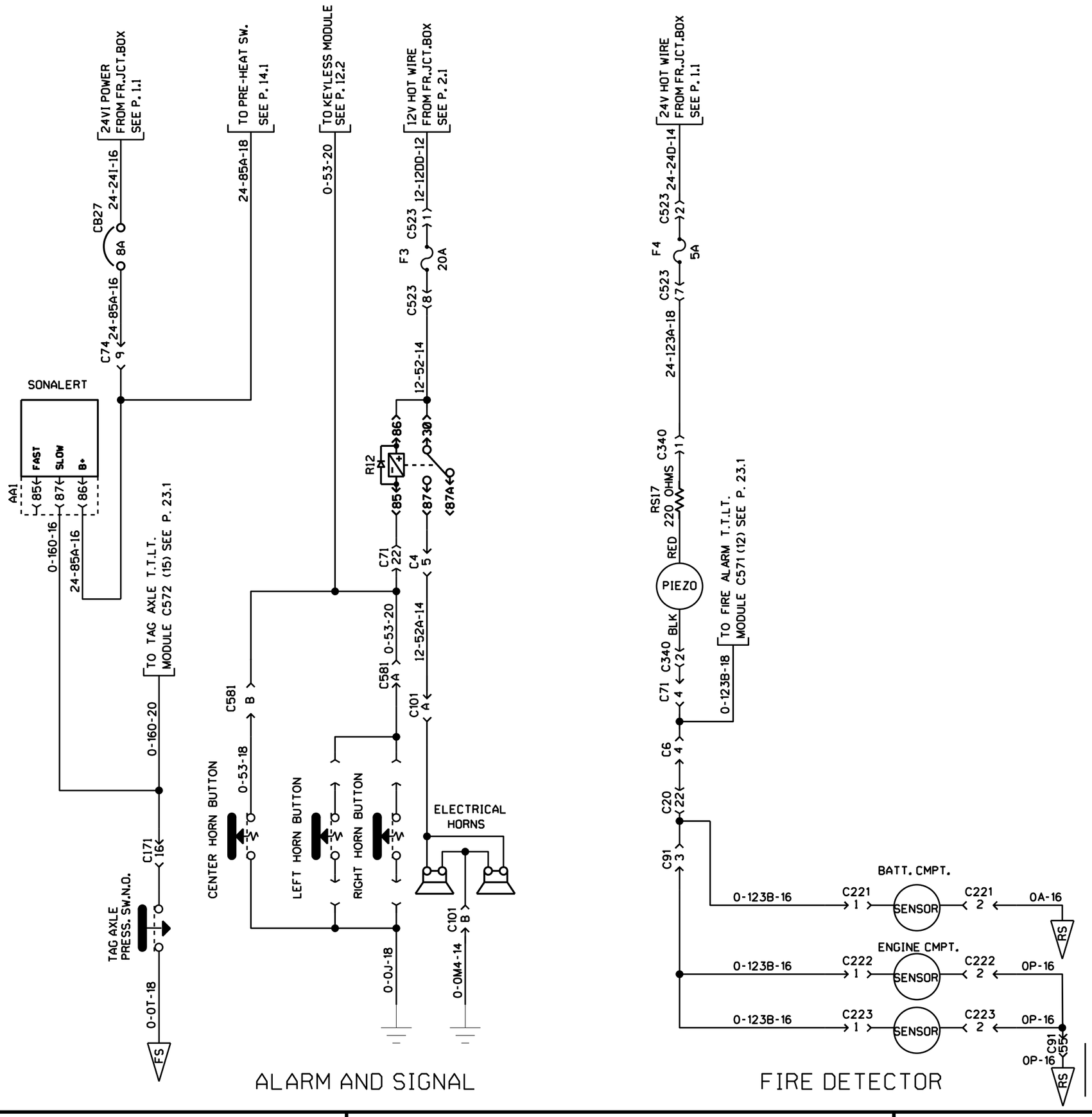

PREVOST	WIRING DIAGRAM	NO: D060978	PAGE: 7.2	REVISION 02