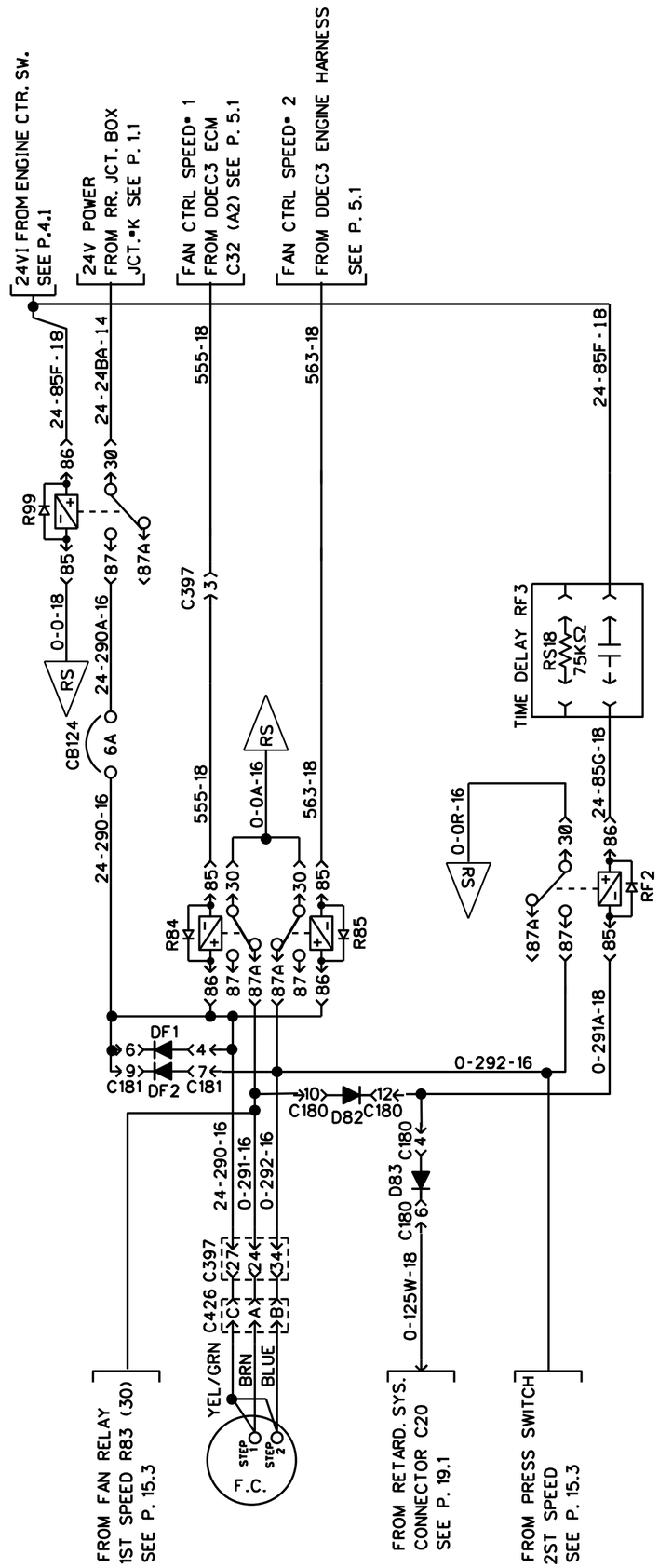

RADIATOR FAN CLUTCH WITH DRIVER'S AIR ONLY