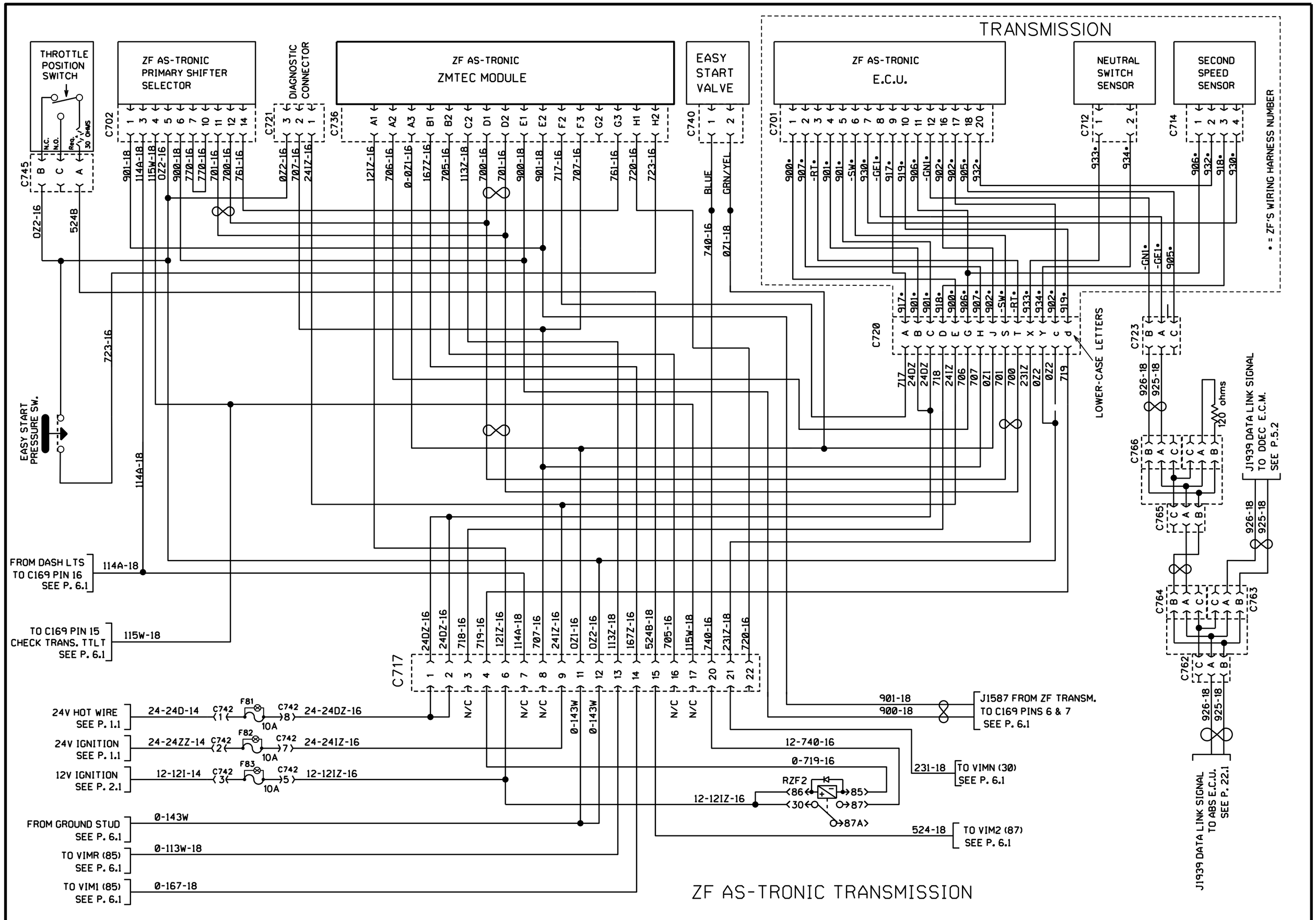

PREVOST	WIRING DIAGRAM	NO: D060993	PAGE: 6.3	REVISION 00