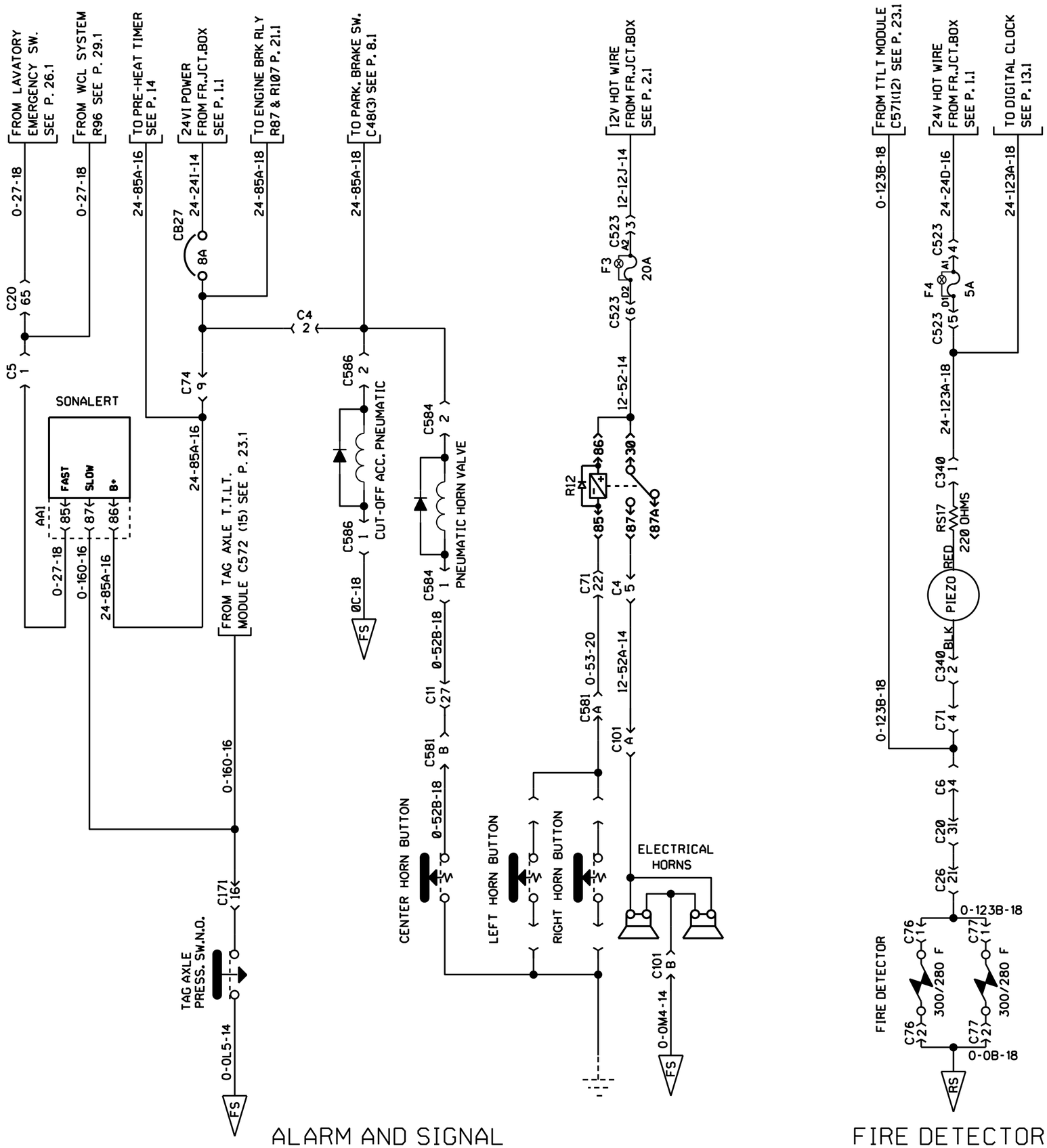

PREVOST	WIRING DIAGRAM	NO: D060993	PAGE: 7.2	REVISION 00