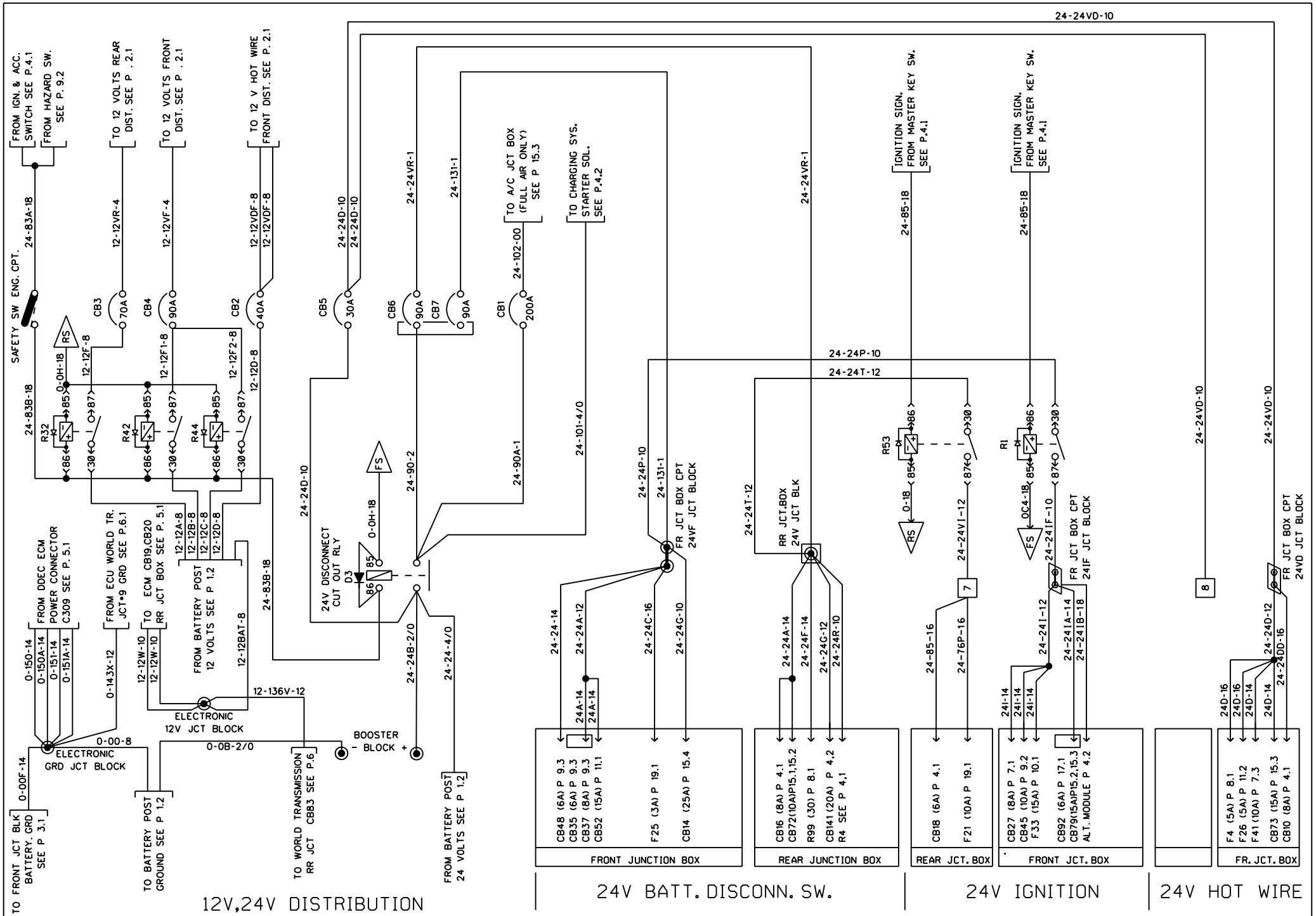

PREVOST	WIRING DIAGRAM	NO: D060994	PAGE: 1.1	REVISION 15