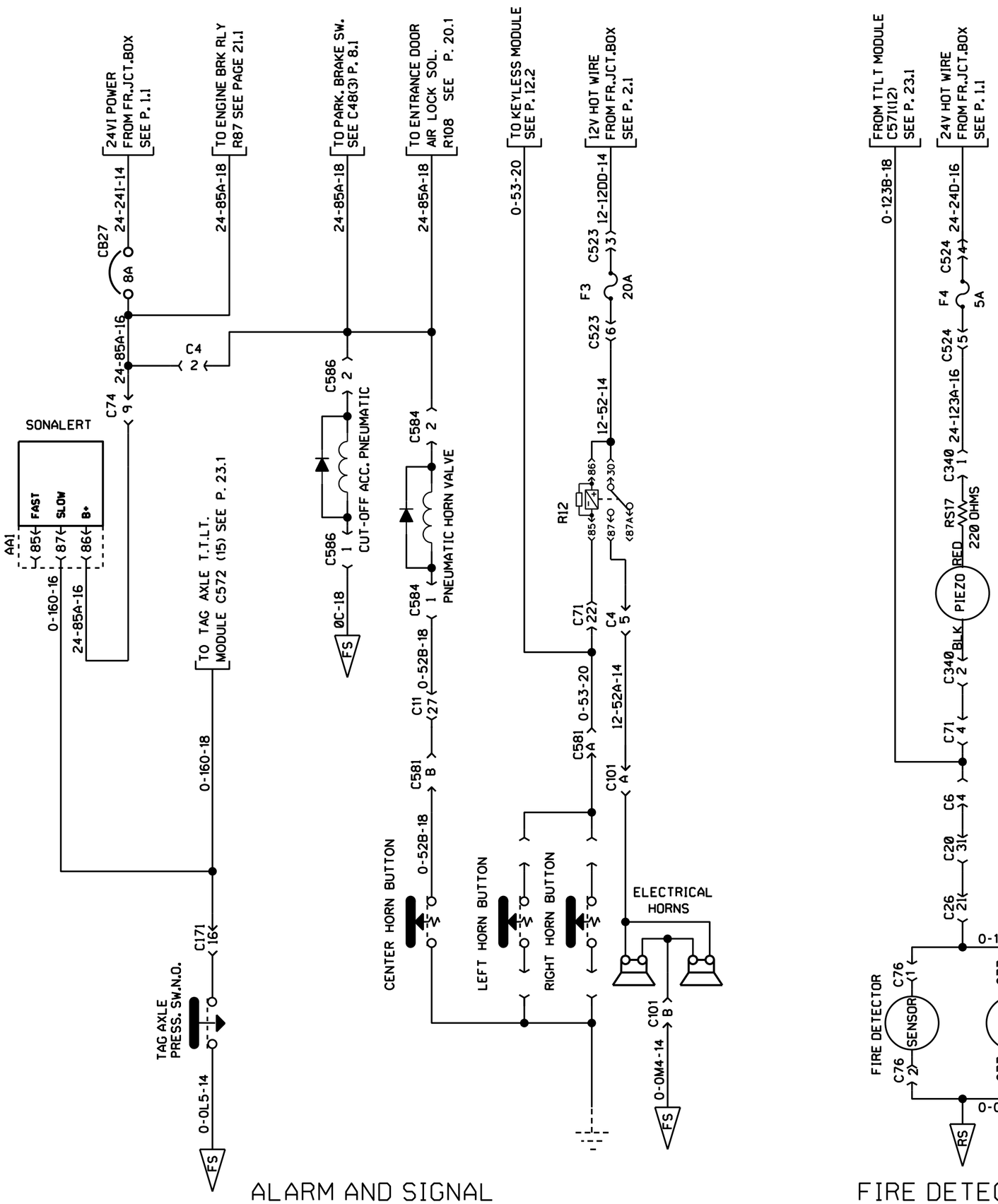

ALARM AND SIGNAL

FIRE DETECTOR

PREVOST	WIRING DIAGRAM	NO: D060994	PAGE: 7.2	REVISION 12