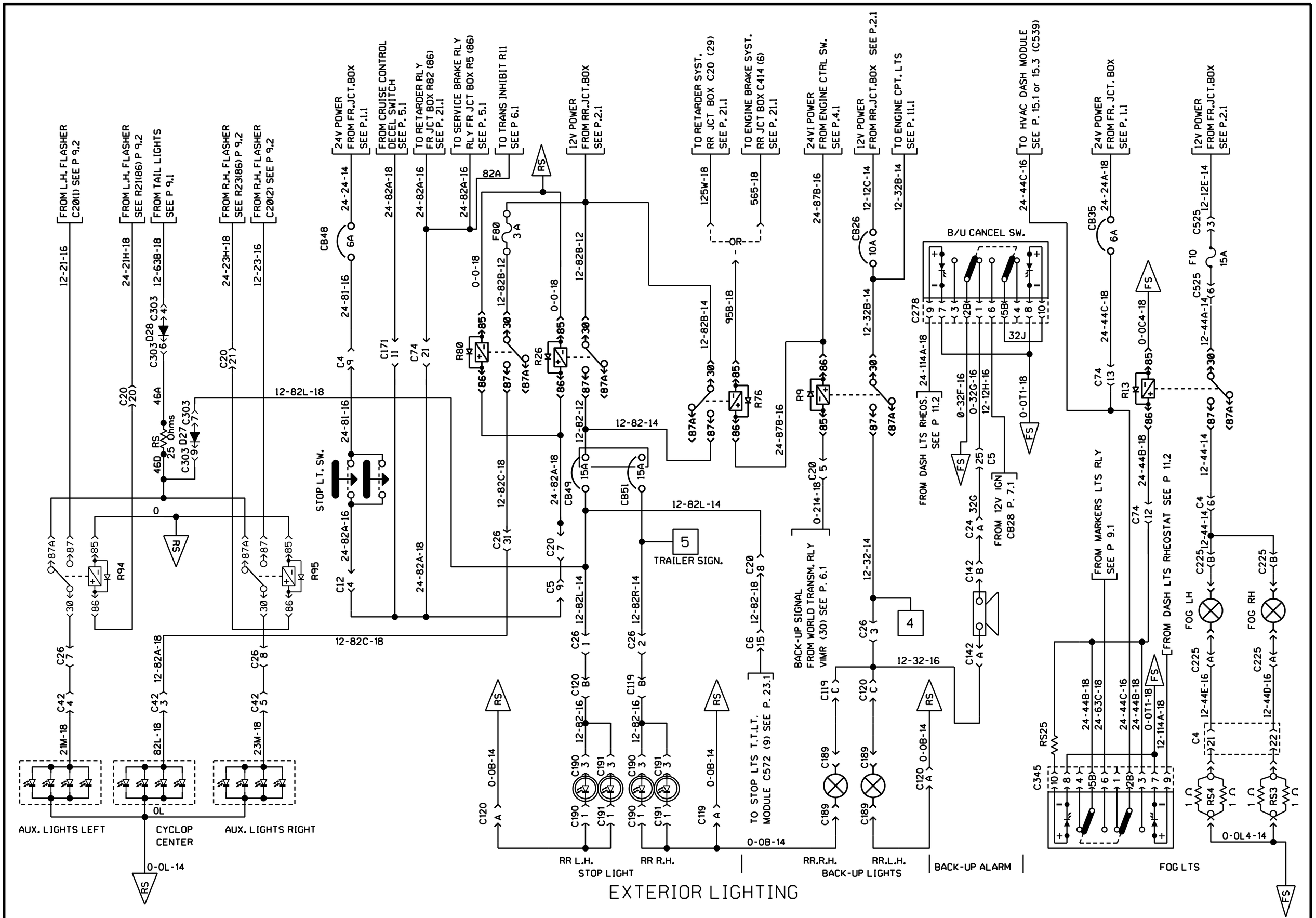

PREVOST	WIRING DIAGRAM	NO: D060994	PAGE: 9.3	REVISION 07