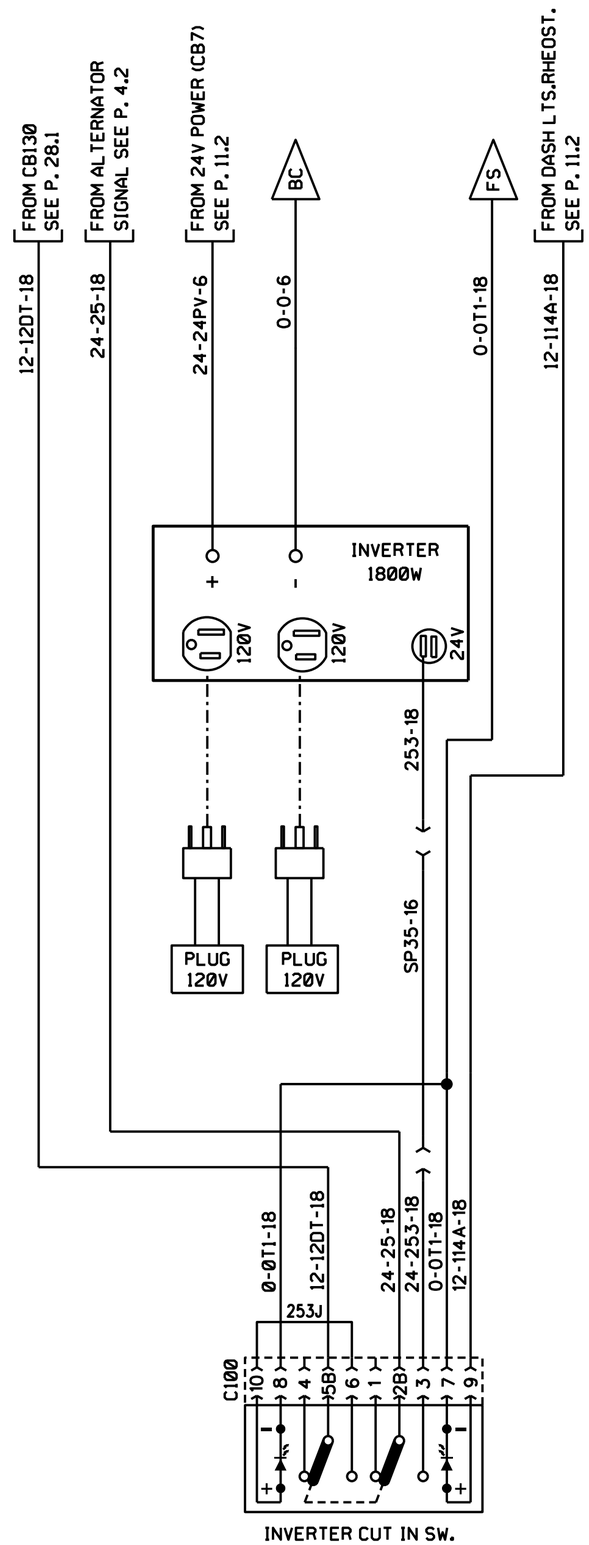

PLUG 120 VOLT

PREVOST	WIRING DIAGRAM	NO: D060938	PAGE: 27.1 sp2	REVISION 00