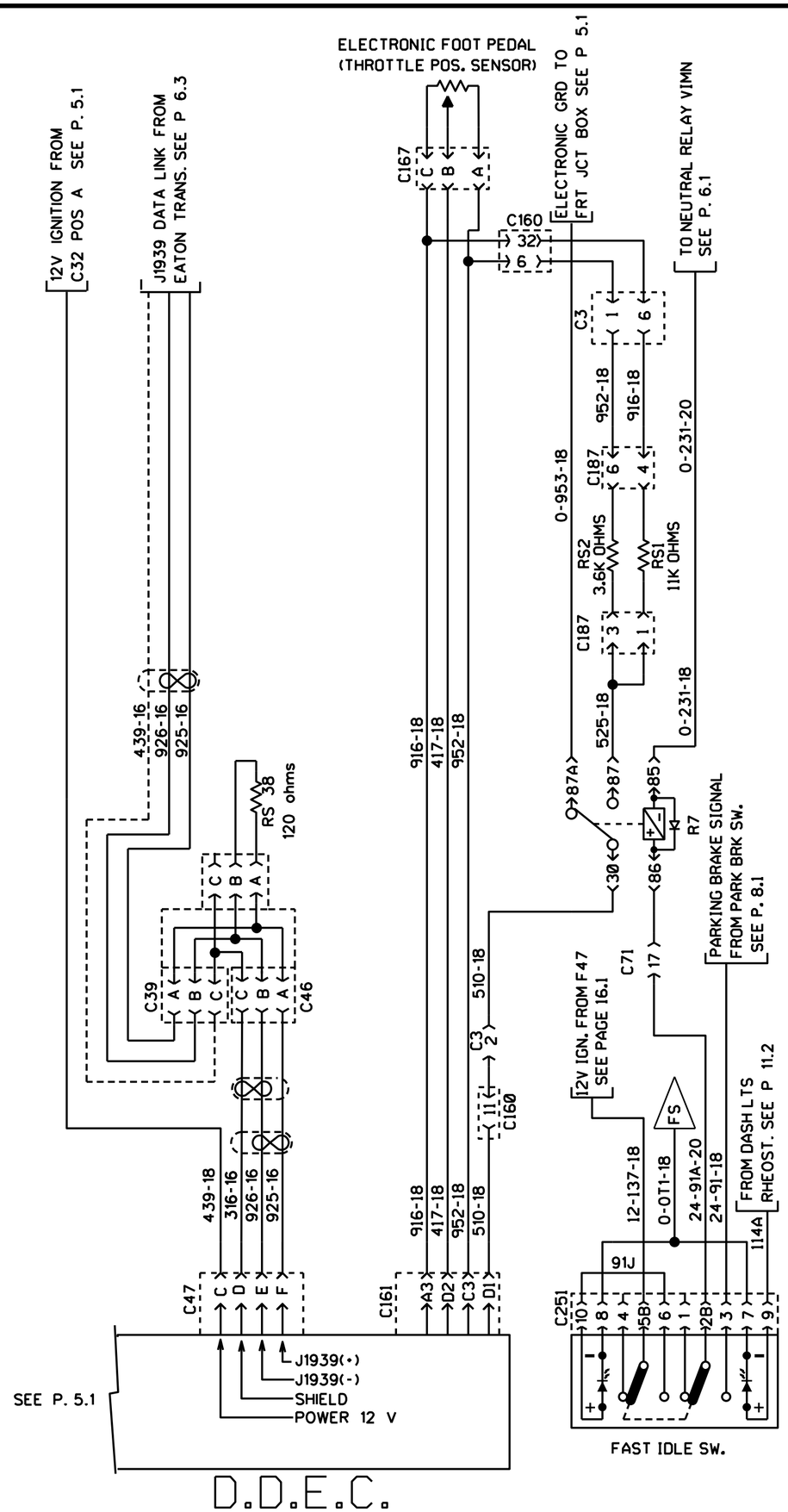

PREVOST	WIRING DIAGRAM	NO: D060938	PAGE: 5.2	REVISION 06