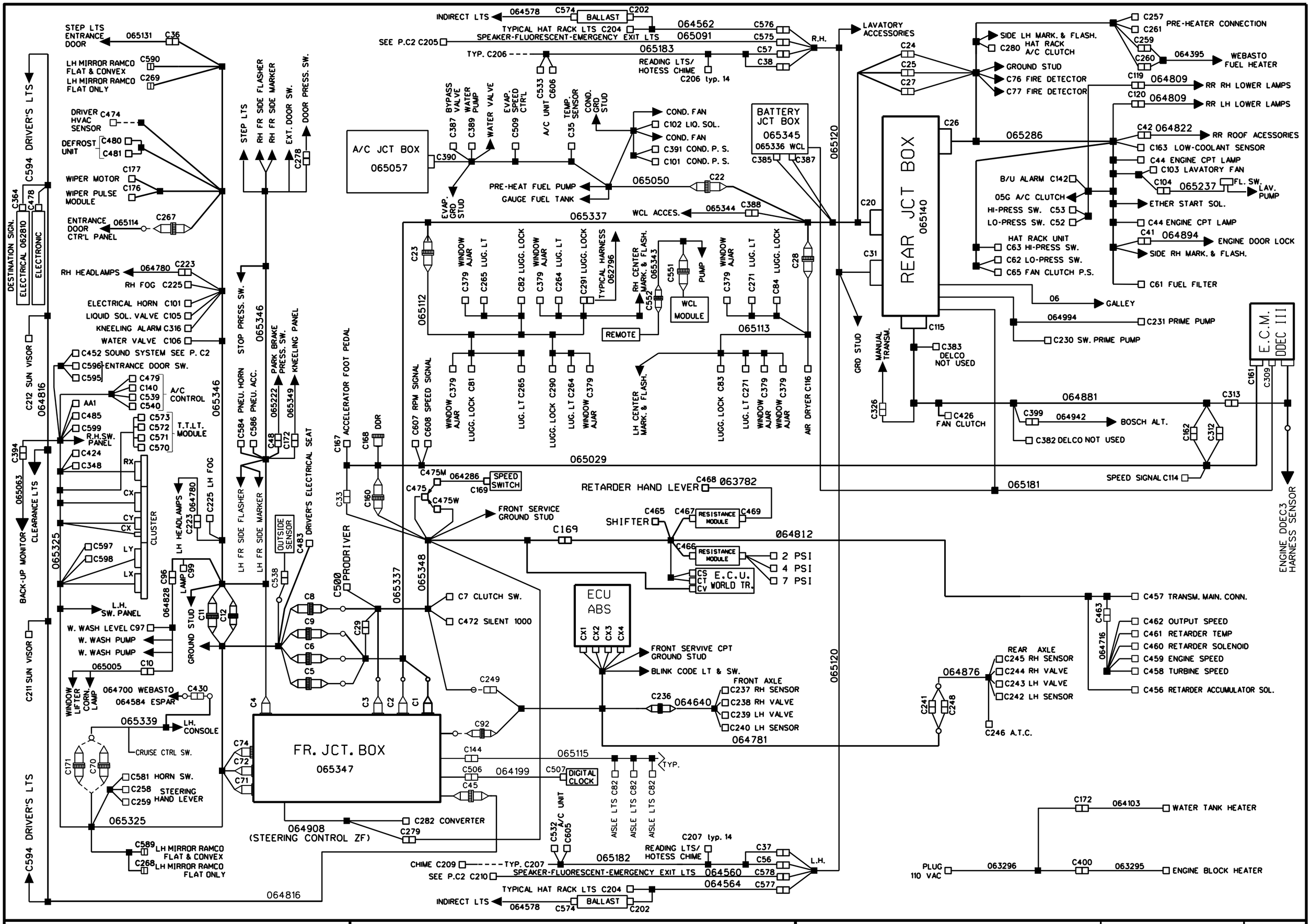

PREVOST	WIRING DIAGRAM	NO: D060938	PAGE: C1	REVISION 04