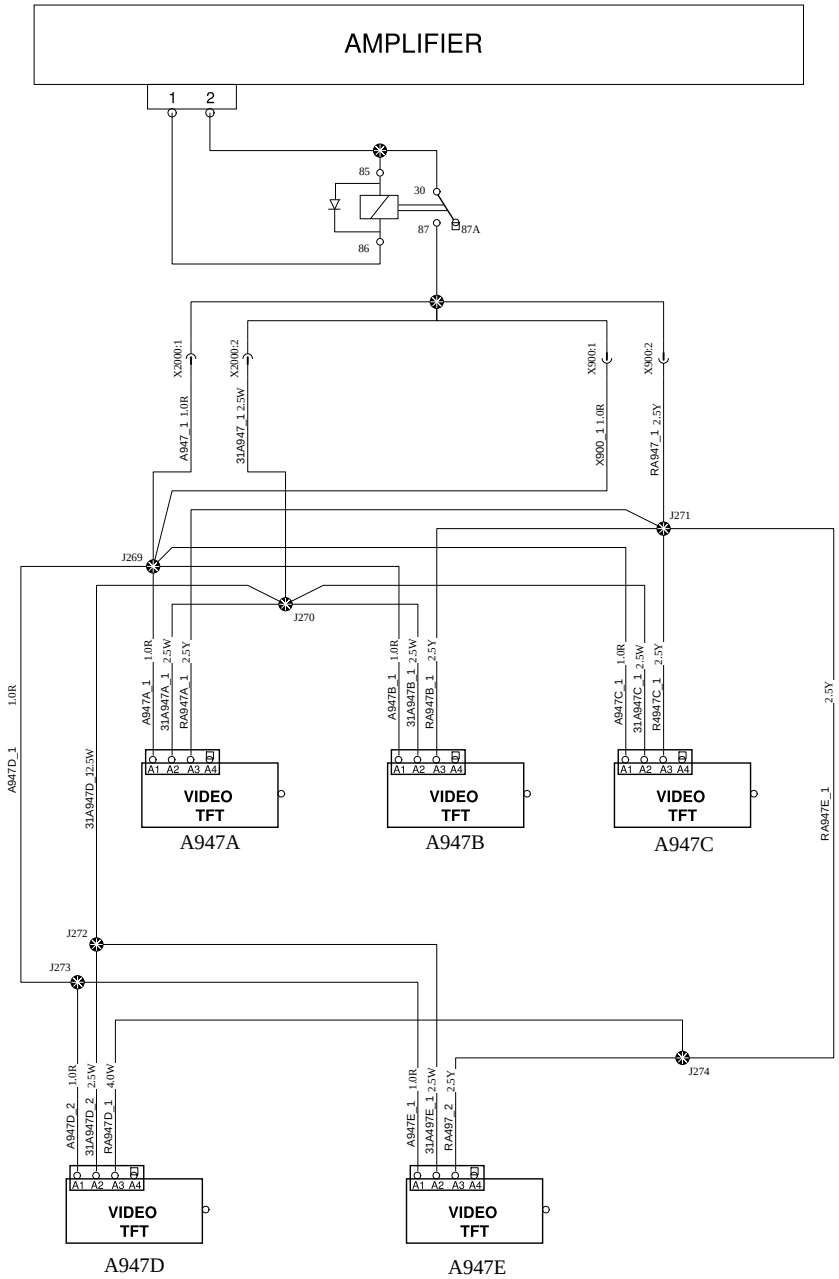

VOLVO Volvo Bus Corporation	Document title WIRING DIAGRAM	Document No	Issue	Volume	Page
	Document type PRODUCT SCHEMATIC	22600119	01	01	56/74